ELECTRONICS CORRIGENDA

September 1996/Issue 105

PIC 16C84 Programmer Page 37

The PIC related web site should be addressed as **http://www.man.ac.uk/~mbhstdj/piclinks.html**.

Sound-to-Light Unit Page 50
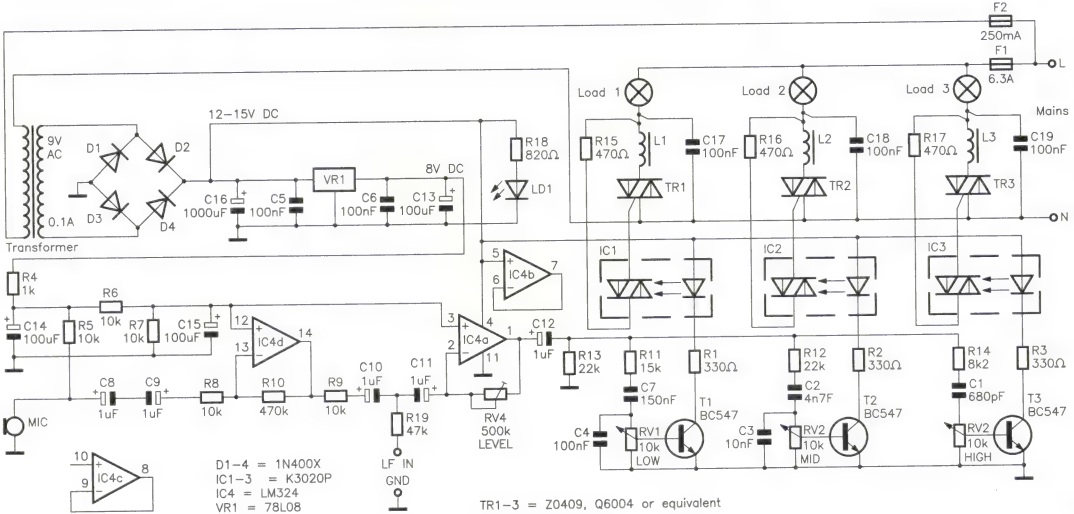
The circuit diagram shows TR1 to TR3 connected to the 12-15V DC rail, they should cross at these points and not be joined, see amended drawing (right). The layout on the PCB is correct.