Corrections & Updates

MP3 Preamp

February 2007, p. 40-45, 060237-I

On the PCB component overlay, the labels of SMD resistors R29 and R32 have been transposed. Resistor 29 (2 kΩ) should be the top device in the row of resistors fitted to the right of S1 and S2. R2 (6kΩ8) should be directly below it.

Ethermeter

March 2007, p. 72-74, 075035-I

Due to a crashed hard disk in the author's PC an early version of the circuit diagram was printed. The correct schematic is reproduced here.

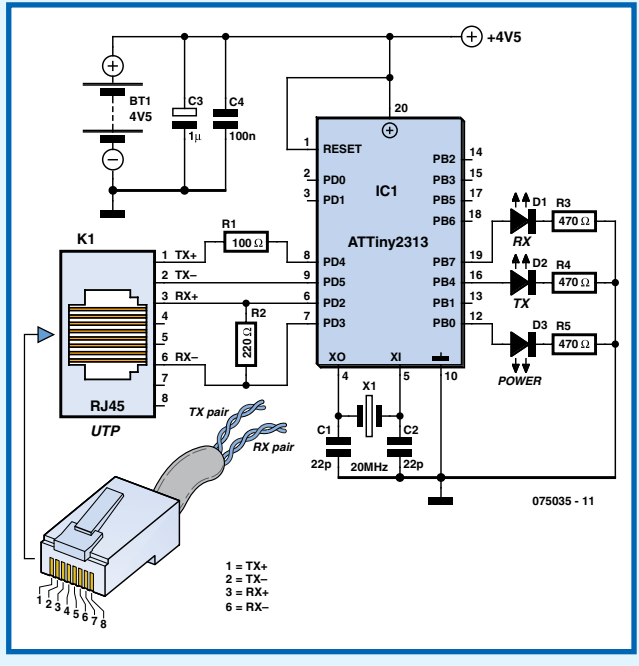

Canon EOS Cameras go Wireless

July/August 2004, p. 102, 030432-1.

In the transmitter circuit diagram, pushbutton S1 should be a normally closed (NC) type.