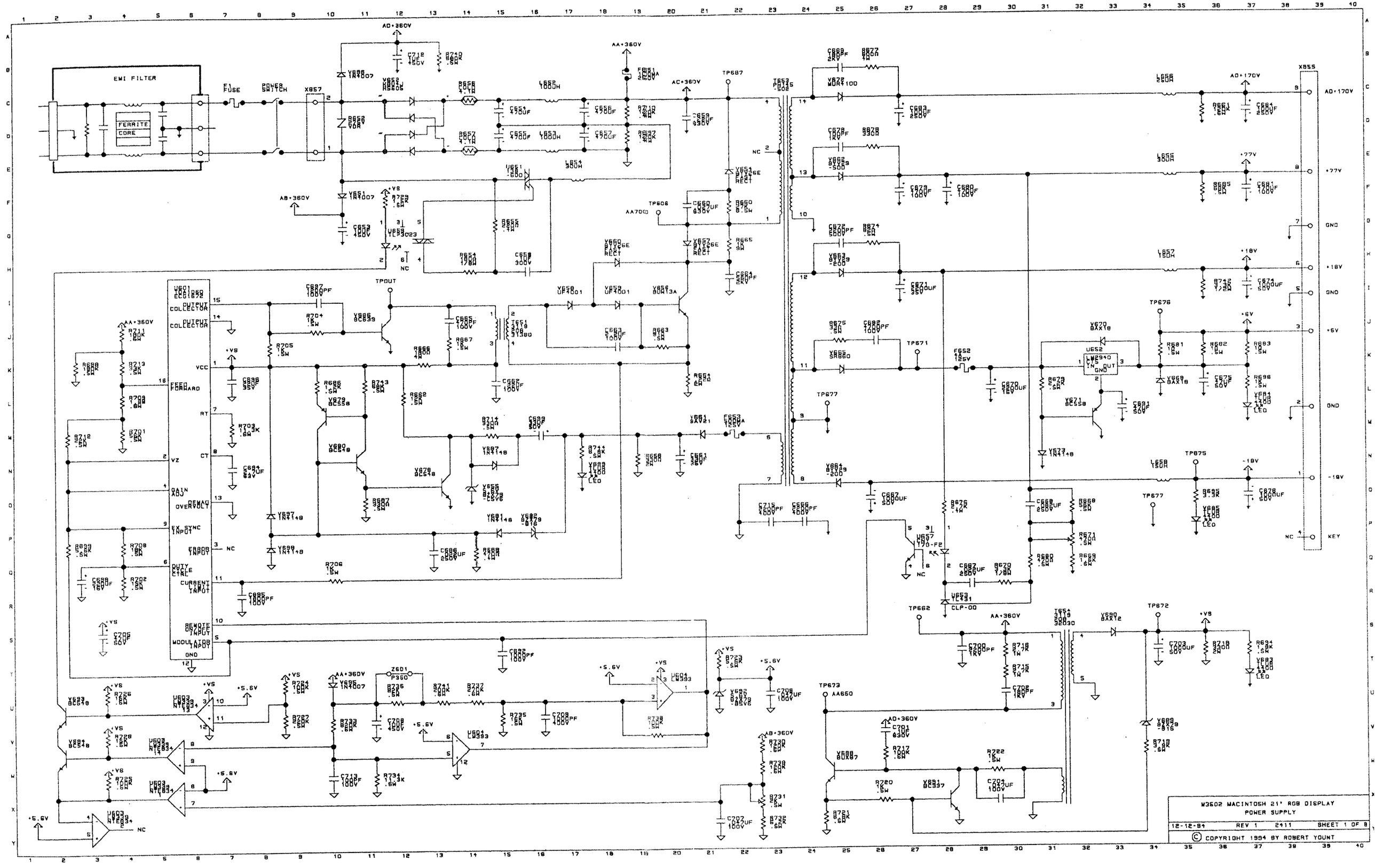
EMI FILTER
FERRITE CORE
FUSE
POWER SWITCH
X857
AD+360V
AA+360V
AB+360V
AC+360V
TP687
TP606
TP606
TP676
TP671
TP677
TP675
TP662
TP672
TP673
X855
AD+170V
+77V
GND
+18V
+6V
-18V
KEY
U601
ECG1852
OUTPUT COLLECTOR
VCC
FEED FORWARD
RT
CT
VZ
GAIN ADJ
OVERVOLT
EX-SYNC INPUT
ERROR INPUT
DUTY CYCLE CTRL
CURRENT INPUT
REMOTE ON/OFF INPUT
MODULATOR INPUT
GND
TP0UT
T651
T653
T654
U652
LM2940
U603
LM339
Z601
P360
AA650
M3602 MACINTOSH 21" RGB DISPLAY
POWER SUPPLY
12-12-94
REV 1
2411
SHEET 1 OF 8
© COPYRIGHT 1994 BY ROBERT YOUNT

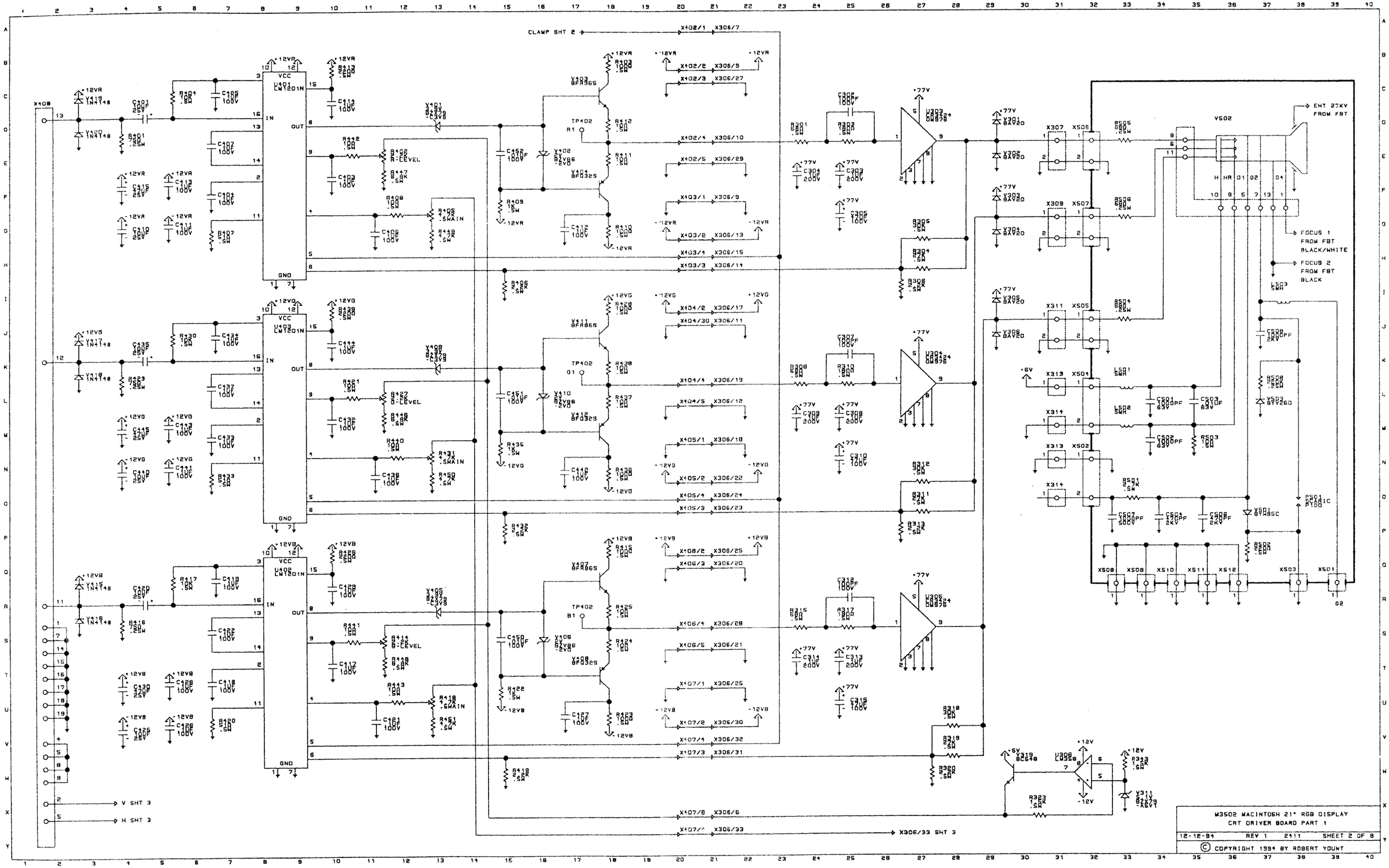
CLAMP SHT 2
EHT 27KV FROM FBT
FOCUS 1 FROM FBT BLACK/WHITE
FOCUS 2 FROM FBT BLACK
V SHT 3
H SHT 3
X306/33 SHT 3
M3502 MACINTOSH 21" RGB DISPLAY
CRT DRIVER BOARD PART 1
12-12-94 REV 1 2411 SHEET 2 OF 8
© COPYRIGHT 1994 BY ROBERT YOUNT

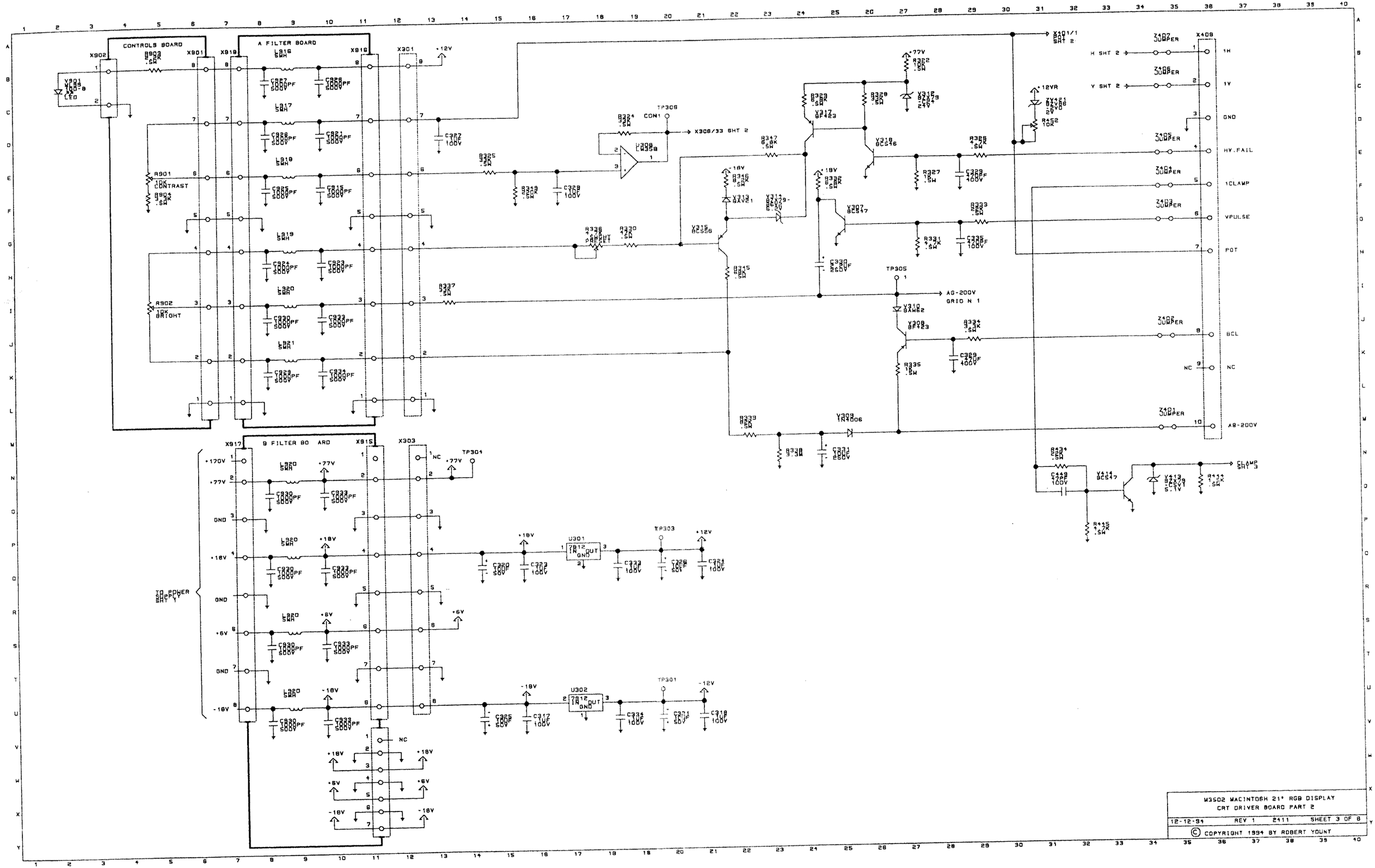
CONTROLS BOARD
A FILTER BOARD
B FILTER BOARD
R901 10K CONTRAST
R902 10K BRIGHT
X408
1H
1V
GND
HV.FAIL
1CLAMP
VPULSE
POT
BCL
NC
AB-200V
H SHT 2
Y SHT 2
X408/33 SHT 2
AG-200V
GRID N 1
CLAMP SHT 3
TO POWER SUPPLY SHT 7
U301
U302
TP301
TP303
TP304
TP305
TP308
W3502 MACINTOSH 21" RGB DISPLAY
CRT DRIVER BOARD PART 2
12-12-94
REV 1
2411
SHEET 3 OF 8
© COPYRIGHT 1994 BY ROBERT YOUNT

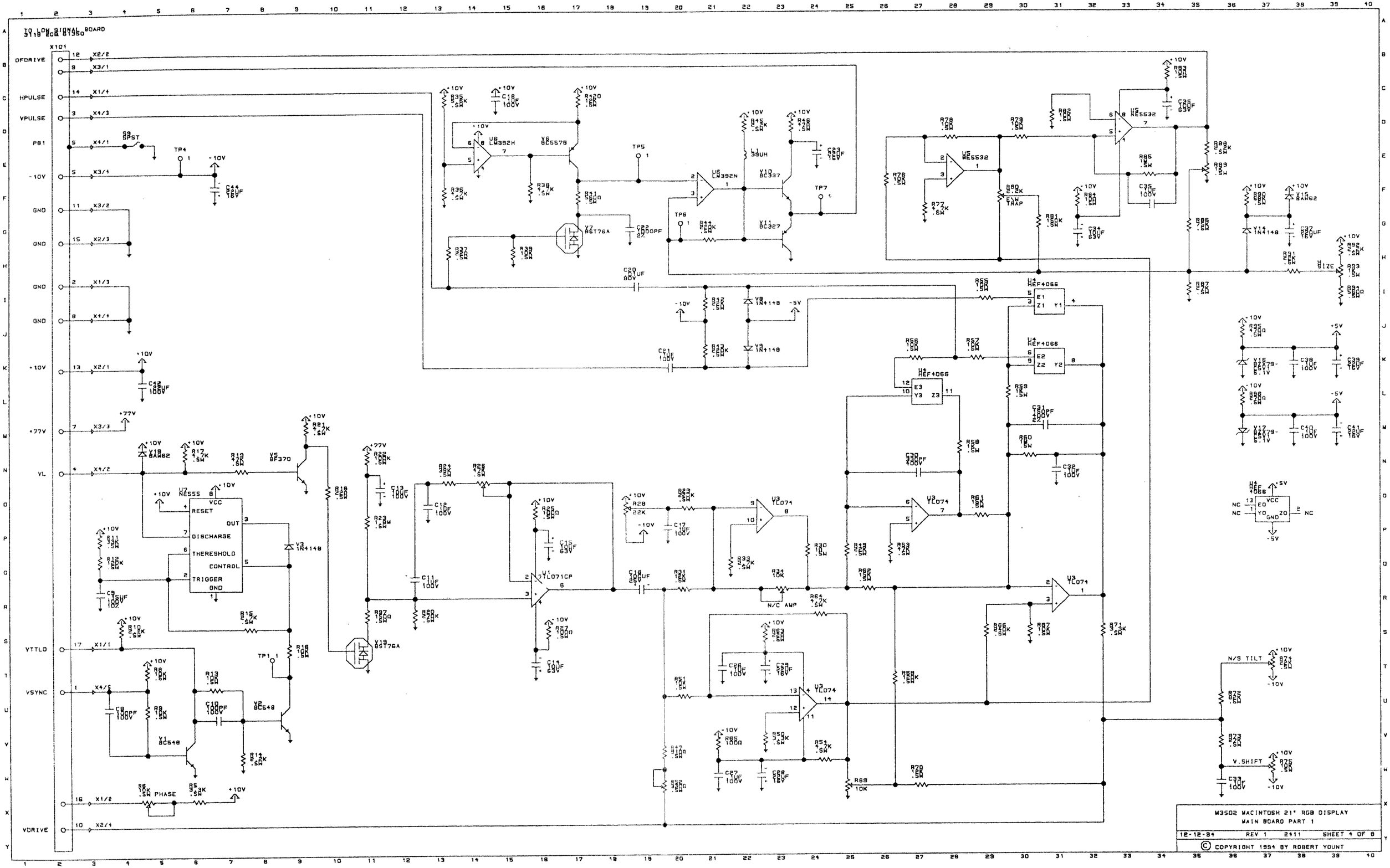
TO LOW SIGNAL BOARD
X101
DFDRIVE
HPULSE
VPULSE
PB1
-10V
GND
+10V
+77V
VL
VTTLD
VSYNC
VDRIVE
U6 LM392N
U5 NE5532
U4 HEF4066
U3 TL074
U1 TL071CP
U2 NE555
RESET
OUT
DISCHARGE
THERESHOLD
CONTROL
TRIGGER
GND
VCC
N/C AMP
PHASE
SIZE
N/S TILT
V.SHIFT
M3502 MACINTOSH 21" RGB DISPLAY
MAIN BOARD PART 1
12-12-84
REV 1
2411
SHEET 4 OF 8
© COPYRIGHT 1984 BY ROBERT YOUNT

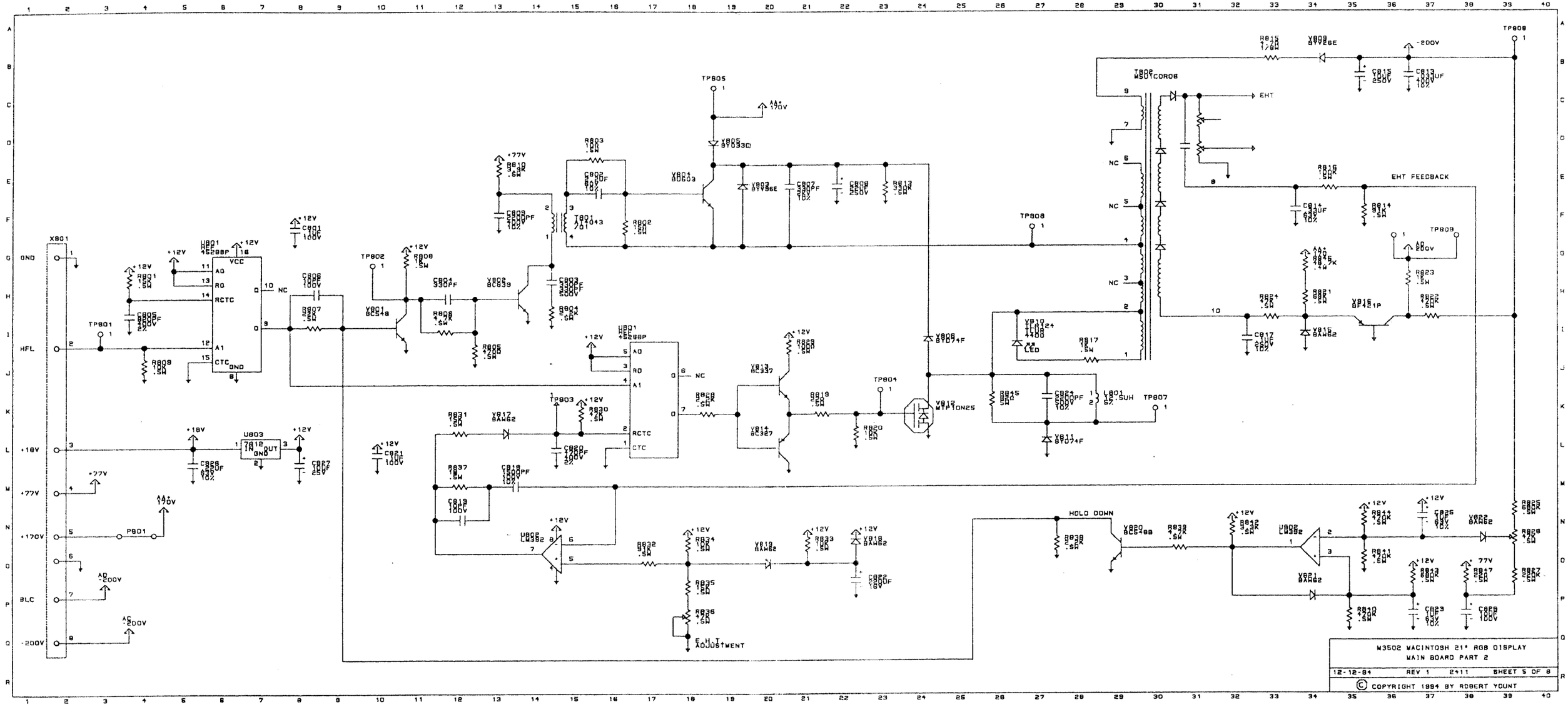
M3502 MACINTOSH 21" RGB DISPLAY
MAIN BOARD PART 2
12-12-94
REV 1
2411
SHEET 5 OF 8
© COPYRIGHT 1994 BY ROBERT YOUNT
EHT FEEDBACK
EHT
HOLD DOWN
EHT ADJUSTMENT
GND
HFL
+16V
+77V
+170V
BLC
-200V
X801
U801
U802
U803
U804
U805
U806
U807
T801
T802
TP801
TP802
TP803
TP804
TP805
TP806
TP807
TP808
TP809
P801
LED
L801
10.5UH

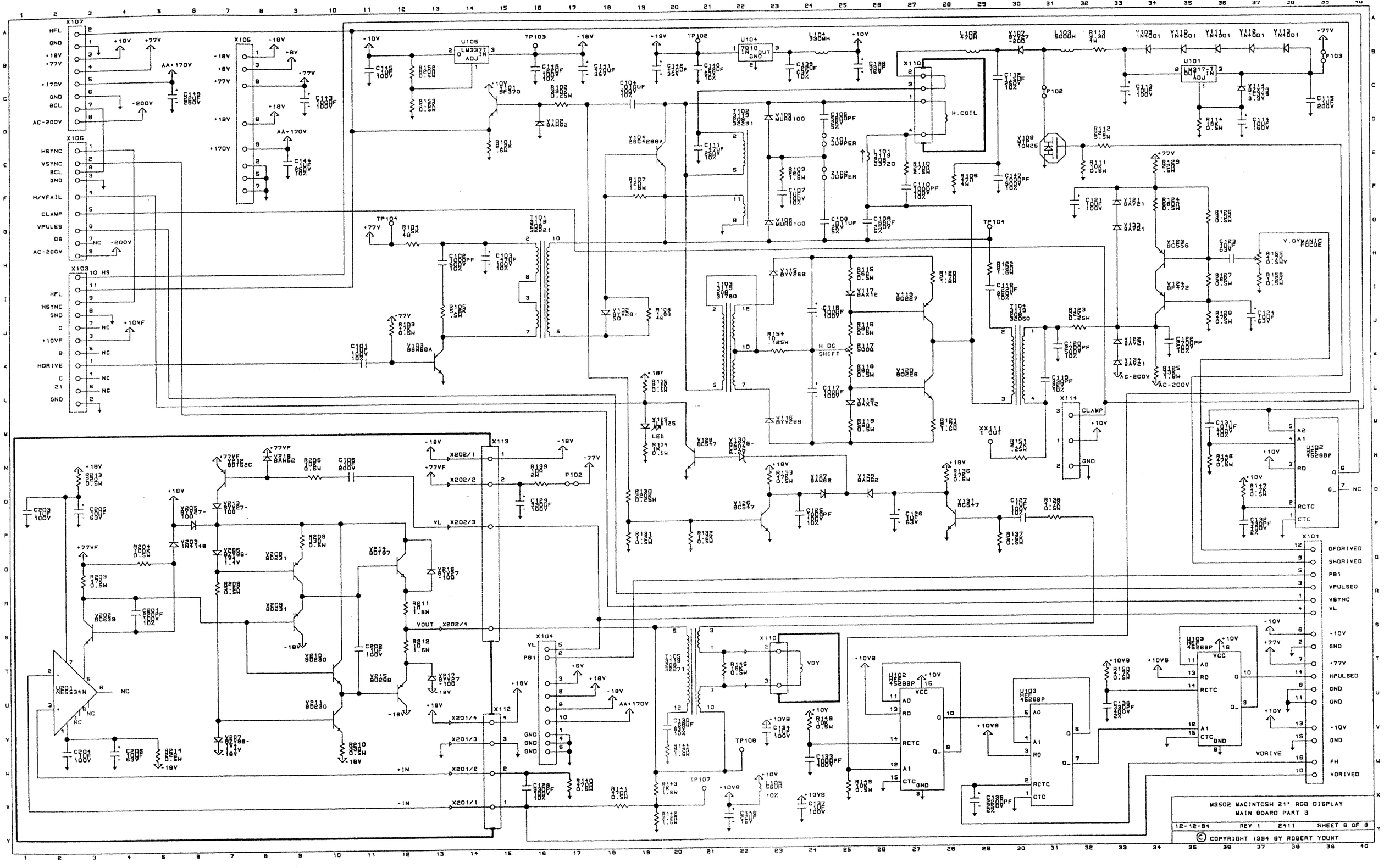
M3502 MACINTOSH 21" RGB DISPLAY
MAIN BOARD PART 3
12-12-84
REV 1
2411
SHEET 8 OF 8
© COPYRIGHT 1994 BY ROBERT YOUNT
X107
X106
X105
X103
X110
X101
X104
X113
X112
X114
H.COIL
V.DYNAMIC FOCUS
H DC SHIFT
VDY
VDRIVE
U101
U102
U103
U105
U104
U201
T101
T102
T103
T104
T105
T106
T107
T108
T109
T110
T111
T112
T113
T114
T115
T116
T117
T118
T119
T120
T121
T122
T123
T124
T125
T126
T127
T128
T129
T130
T131
T132
T133
T134
T135
T136
T137
T138
T139
T140

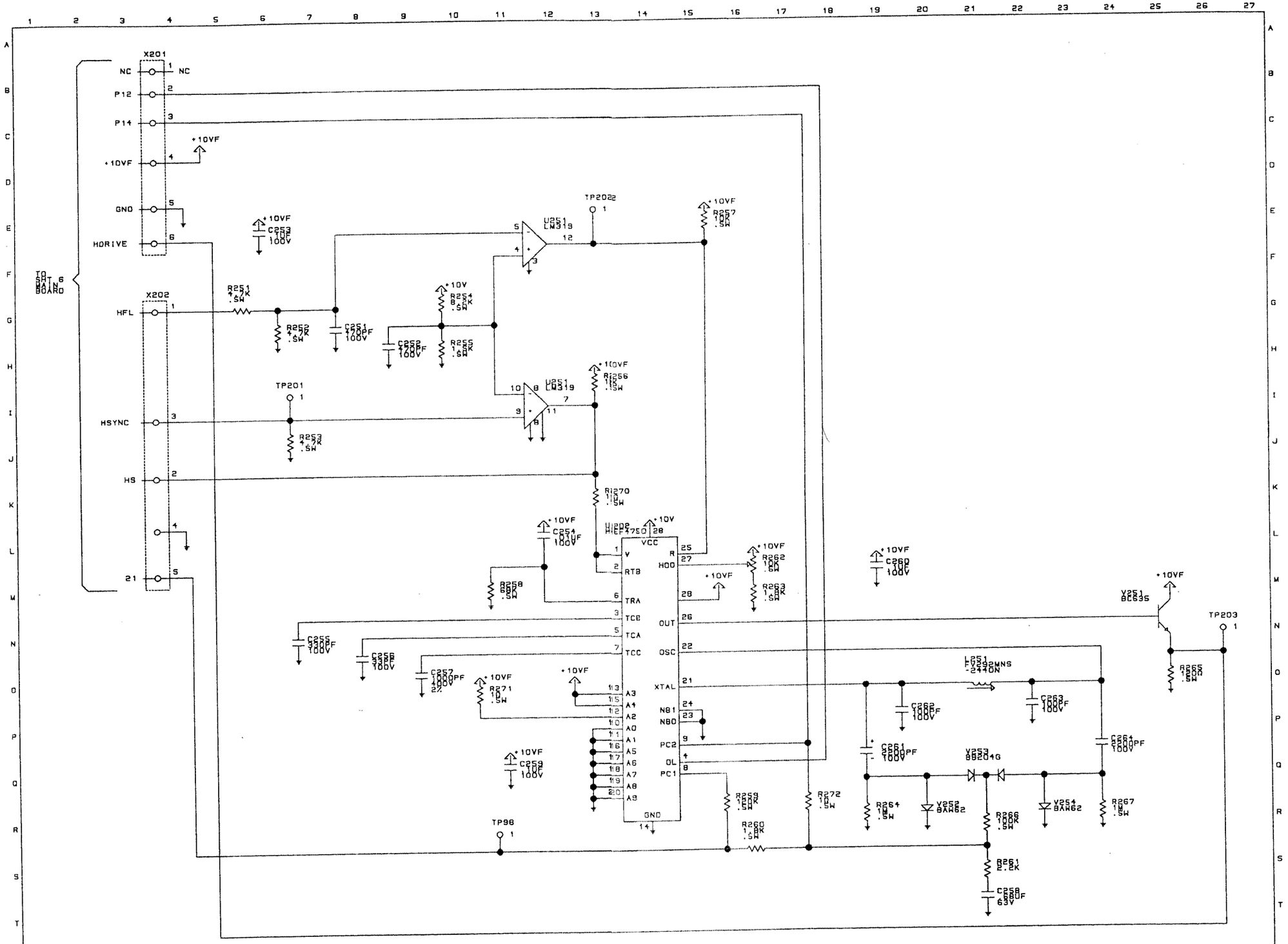
X201
NC
P12
P14
+10VF
GND
HDRIVE
TO SAT 6 MAIN BOARD
X202
HFL
HSYNC
HS
TP2022
TP201
TP203
TP96
U251 LM319
U252 HEF4750
V251 BC635
V252 BAW62
V253 BB204G
V254 BAW62
L251 22uHNS -2470N
R251 4.7K .5W
R252 4.7K .5W
R253 4.7K .5W
R254 8.2K .5W
R255 1.5K .5W
R256 10 .5W
R257 10K .5W
R258 68K .5W
R259 10K .5W
R260 1.8K .5W
R261 2.2K
R262 10K .5W
R263 1.8K .5W
R264 10 .5W
R265 150 .5W
R266 100K .5W
R267 10 .5W
R270 10 .5W
R271 10 .5W
R272 10 .5W
C251 470pF 100V
C252 470pF 100V
C253 10uF 100V
C254 .01uF 100V
C255 330pF 100V
C256 330pF 100V
C257 1000pF 100V
C258 680pF 63V
C259 .01uF 100V
C260 .01uF 100V
C261 2500pF 100V
C262 100pF 100V
C263 100pF 100V
C264 2500pF 100V
VCC
R
HOO
OUT
OSC
XTAL
NB1
NB0
PC2
OL
PC1
RTB
TRA
TCB
TCA
TCC
A3
A4
A2
A0
A1
A5
A6
A7
A8
A9
GND
M3502 MACINTOSH 21" RGB DISPLAY
MAGNETOMETER/DEGAUSS BOARD
12-12-94
REV 1
2411
SHEET 7 OF 8
© COPYRIGHT 1994 BY ROBERT YOUNT

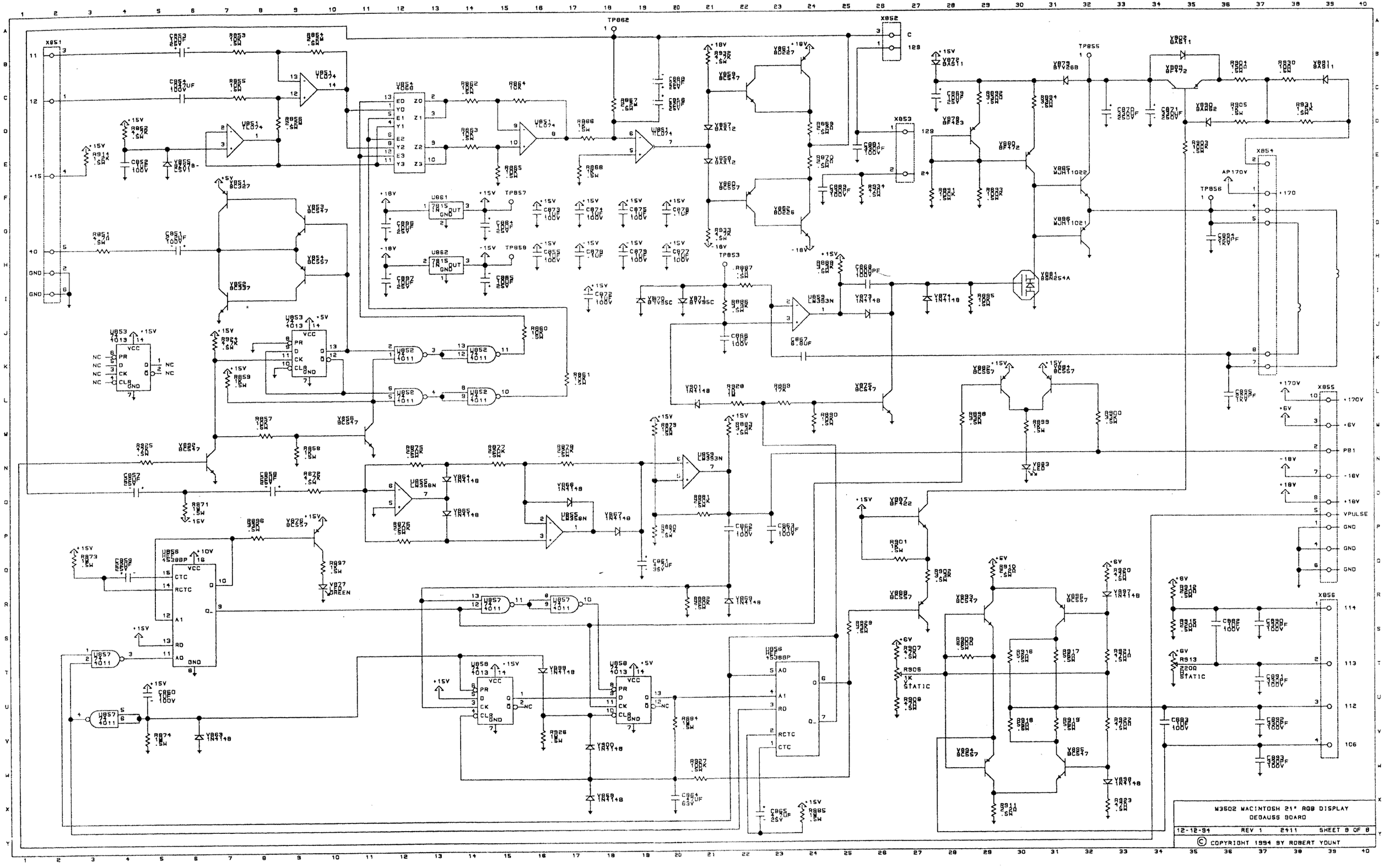
M3502 MACINTOSH 21" RGB DISPLAY
DEGAUSS BOARD
12-12-94
REV 1
2411
SHEET 8 OF 8
© COPYRIGHT 1994 BY ROBERT YOUNT