ELAPSED TIME METER

THE meter is connected across the mains supply to the device being timed, after any on/off switch or thermostat.

Because the display is only activated when a reading is required, and is not multiplexed, the circuit shows very little current consumed when counting, and a negligible amount on standby. It will run for at least a year on one PP3 battery.

The operation is as follows: when the device being timed is operating, 50Hz pulses are fed from T1 through D37 into IC1. The pulse level is limited to 9V by D38. IC1 is gated by IC2 to divide by 1800. The output of IC2 is stretched by R17 and C1 and clocks IC3a as well as resetting IC1. IC3a gives an output pulse every 0·1 hour, and these pulses are counted by IC3b and IC4, the count being displayed in BCD format when S1 is pressed.

The display l.e.d.s are shunted by diodes, and have other diodes in series, to prevent reverse voltages being applied to the l.e.d.s. The display brightness is kept low to enable the l.e.d.s to be driven directly by the 4518 ICs, and to reduce battery drain.

S2 resets the counters, and D40/D41 ensure that the output pulse from IC2 only resets IC1.

The counter gives a maximum count of 99·9 hours. If a larger count is required, a 4017 could be inserted between IC1 and IC3a, the latter being used for the first (tenths) display. The maximum count will then be 999·9 hours.
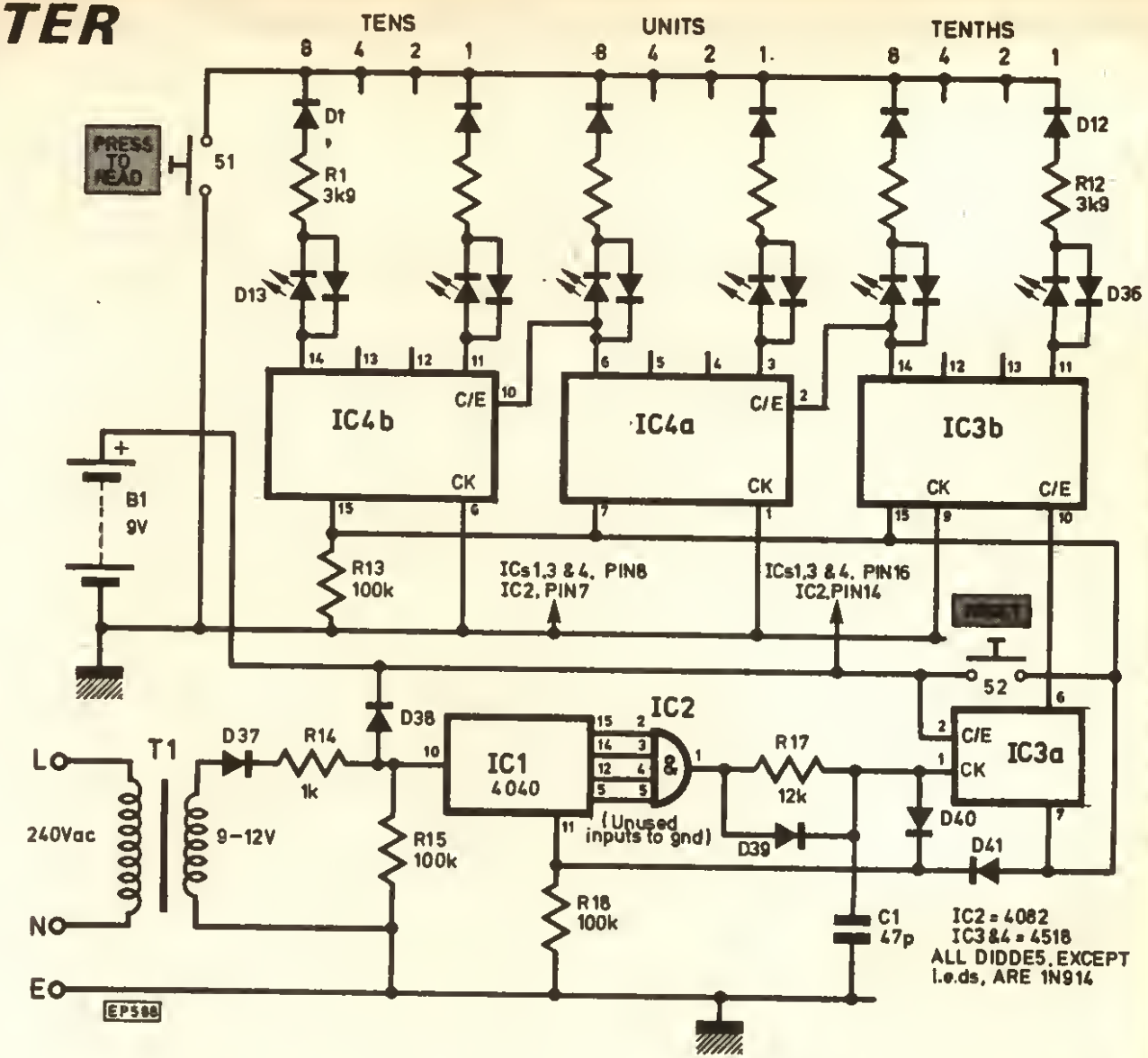
A. M. Tucker,
Charminster,
Dorchester.