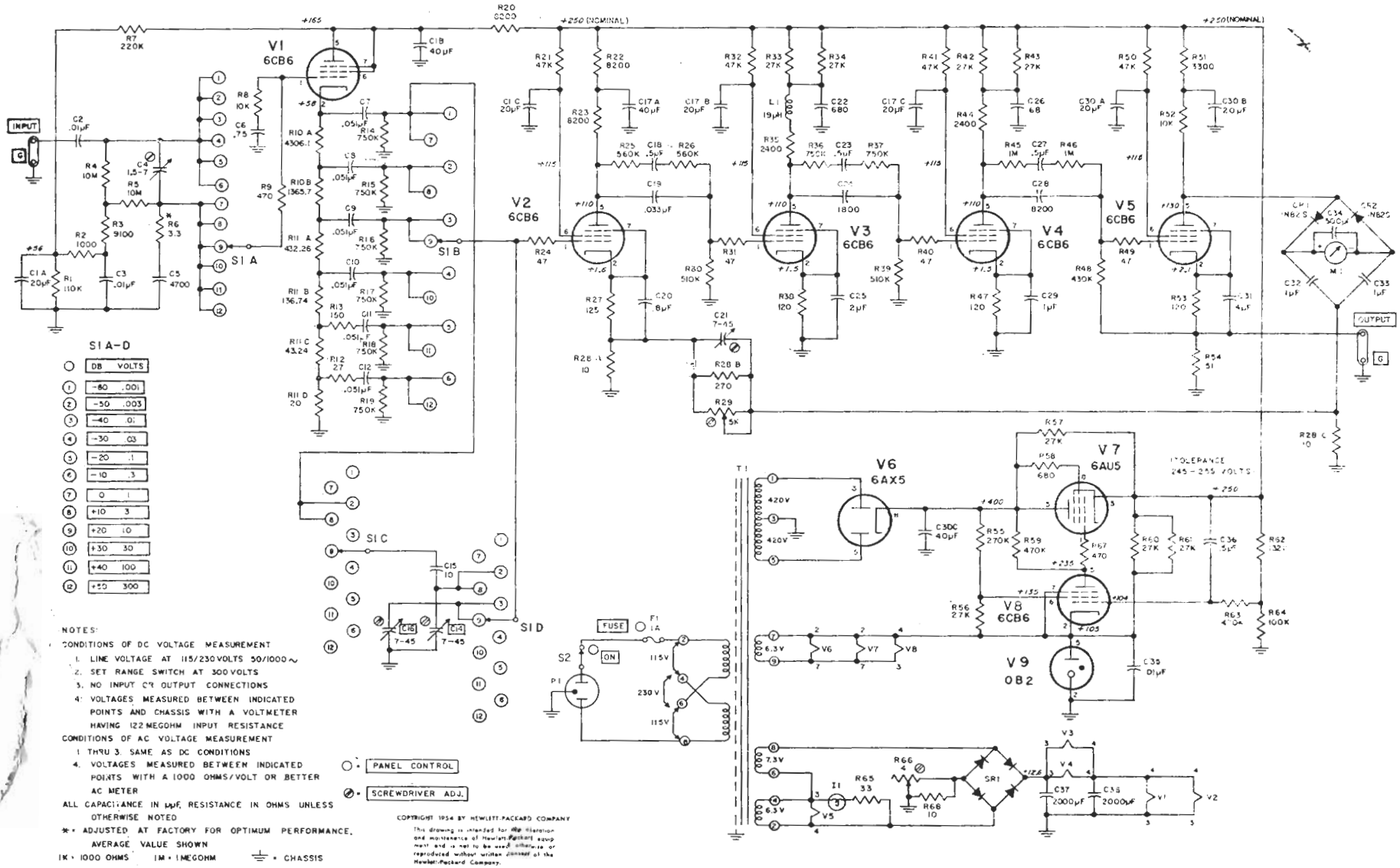

MODEL 400D

VACUUM TUBE VOLTMETER

SERIAL 5131 & ABOVE