BUILD THE

EI CITIZENSCOPE

For the first time anywhere! An oscilloscope designed specifically for displaying Citizens Band modulation.

Herb Friedman, 2W6045

SINCE modulation quality is one of the big factors in the get-out ability of a CB transceiver, many CB'ers have rigged up some means of metering the percent modulation of their transmitters. While such metering circuits are useful, they respond to average rather than peak modulation. When an average reading meter indicates 100% modulation, the actual percent modulation may be substantially lower—or higher.

For optimum modulation adjustment, a peak indicating device is necessary. This is particularly true when speech clippers or compressors are employed since their maximum effectiveness is realized when adjusted for 100% modulation with a peak reading indicator.

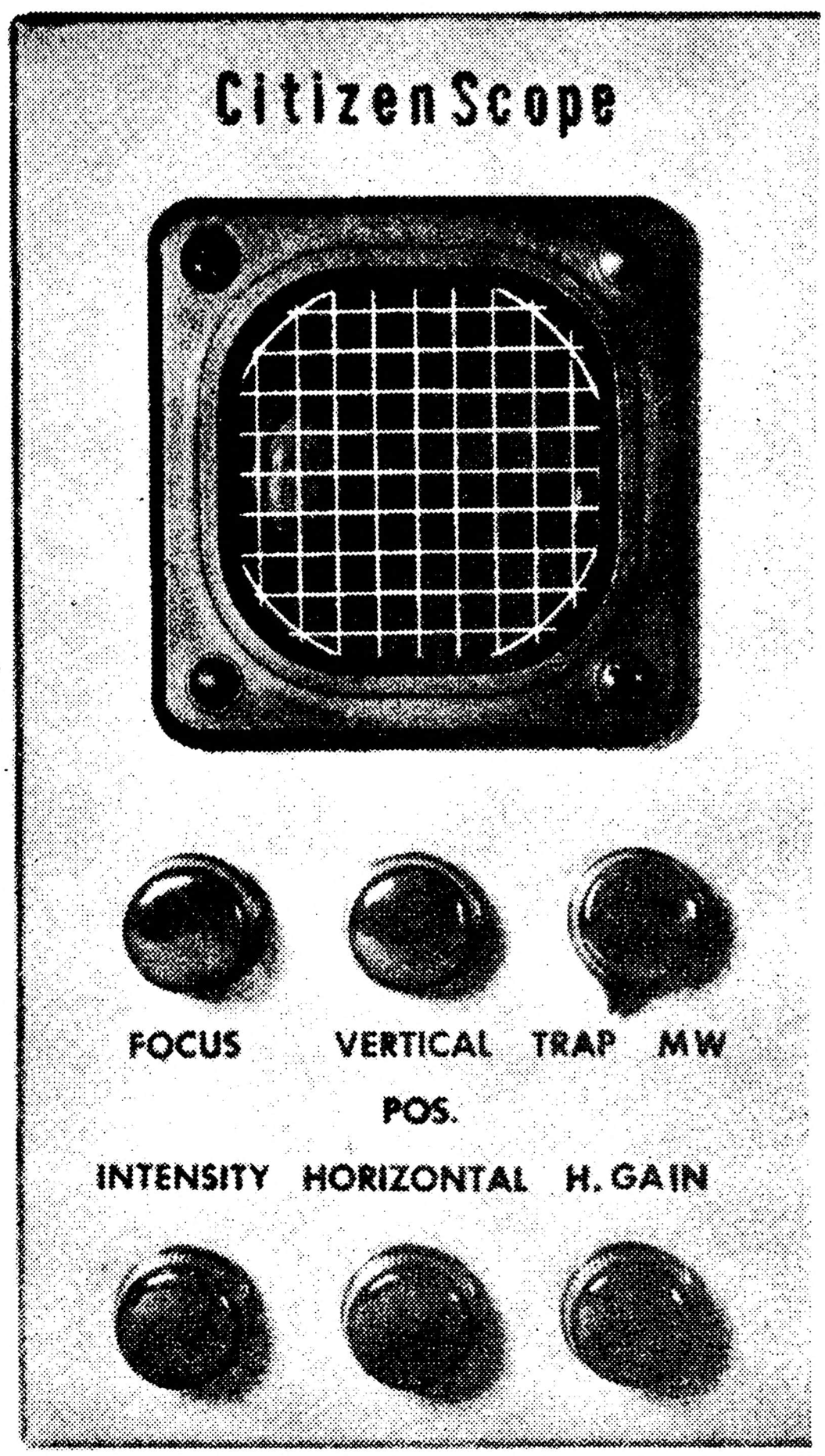

EI's CitizenScope is a peak indicating unit tailor-made for the CB'er. It displays either a trapezoid (TRAP) or modulation waveform (MW) pattern, can be permanently connected into the transmission line, for monitoring (peak) percent modulation. Properly used, the CitizenScope can give you a transmission effectiveness hitherto unobtainable. EI's CitizenScope is modest in cost—about $35. The layout is specifically designed to be easy-to-build—even for the novice. Standard components are used, and except for the cathode ray tube, all are readily available.

Construction. The CitizenScope is built in the main section of a 12x7x4-inch Minibox. The first step is to mark *all* the necessary holes. When drilling the front panel follow the template and allow sufficient clearance around the controls for the cover to be slipped into place. To prevent T1's field from deforming the CRT trace locate T1, as shown, as far as possible from the CRT.

RF input components, J1, J2, L1 and S2, should be mounted close to each other toward the cabinet's rear in the

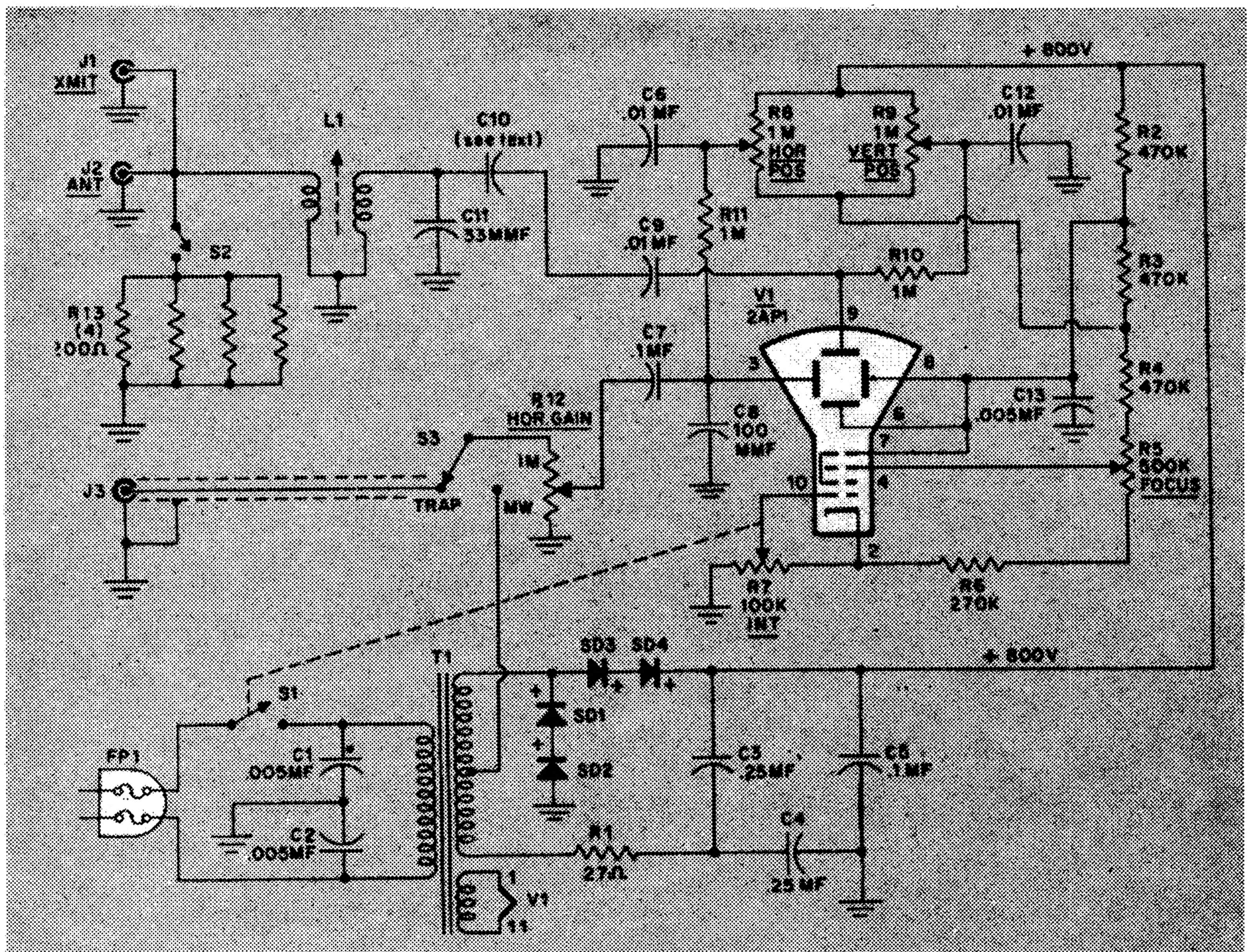

Complete CitizenScope schematic. Special RF input coil (L1) permits response to CB signal.

arrangement shown. Bus bar or doubled wire is used between J1 and J2.

The CRT bezel, which serves as V1's front support is centered on the front panel as shown. V1's base is supported by two 2-inch standoffs, metal or insulated. You can improvise them from metal tubing or use standard standoffs. The standoffs are mounted 6⅛ inches back from the inside of the front panel.

Wrap six turns of plastic electrical tape around V1's Bakelite base. Using thin scrap metal (as from a tin can) fashion two straps. Bend the straps around the taped CRT base to give a snug (but not tight) fit when assembled.

The green filter in the Millen kit is supplied without a grid. However, grids are included in the Techni-Cal Oscilloscope Decal kit (which also includes the other control labels). It is important that V1's socket be in place before V1 is mounted. For correct trace position, install V1 with pin 1 toward the bottom of the cabinet. Terminal strip TS4 mounts on one standoff with a solder lug for grounding.

Coil L1 uses a Cambridge Thermionic

Jt and Ct must be added to transmitter output.

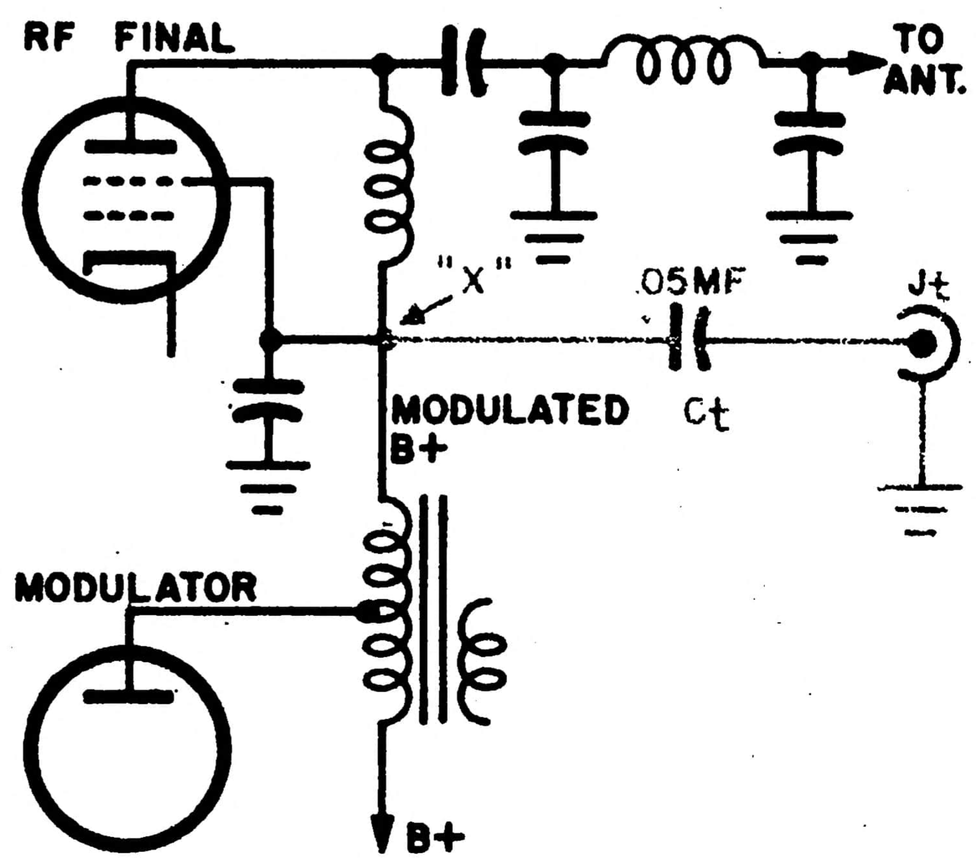

Co. coil form, with a secondary of eight turns of No. 24 enameled wire close-wound and centered on the form. A two-turn primary winding of No. 22 solid plastic insulated hookup wire is tightly wound over the bottom end of the first winding. Make certain both windings are as tight as possible on the form and cemented in place with coil dope.

Since there's about 800 VDC in the CitizenScope, use No. 22 solid thermoplastic insulated wire throughout to prevent arc-over and breakdown.

Scope Checkout. Set the horizontal and vertical positioning controls R8 and R9 to midpoint and set S3 to TRAP. Turn on the CitizenScope with intensity control R7/S1. After about thirty seconds adjust R7 and focus control R5 until a focused spot appears on the CRT. Move the spot horizontally and vertically with R8 and R9. Set S3 to MW and adjust horizontal gain control (R12) until the spot expands into a horizontal line. If you cannot obtain the horizontal line check S3's wiring. Full clockwise rotation of R12 should expand the line past the edges of the CRT.

Connect the transmitter to J1 and switch S2 on—this connects in the dummy load. Adjust R12 so the line just reaches the edges of the CRT and turn on the transmitter. No modulation is required in this step. Adjust L1's slug for maximum height (about 1 inch of the observed RF pattern). For transmitters with outputs from .5 to 1.5 watts, C10 is 33 mmf; for 1.5 to 2.5 watts use 15 mmf. The pattern can be adjusted to any height by juggling the value of C10 —the lower the value the smaller the pattern. Don't attempt to increase the unmodulated height beyond one inch or the pattern will go off-screen at 100% modulation.

The Trapezoidal Pattern. To obtain a trapezoid pattern, a sample of the transmitter's modulator output must be fed to the CitizenScope via J3. Mount a phono jack (Jt) on the rear apron of the transceiver and connect a .05 mf, 600 VDC capacitor (Ct) between Jt and the point "X" where the modulated B+ feeds the plate and screen of the final RF amplifier.

Using shielded wire, connect Jt to J3.

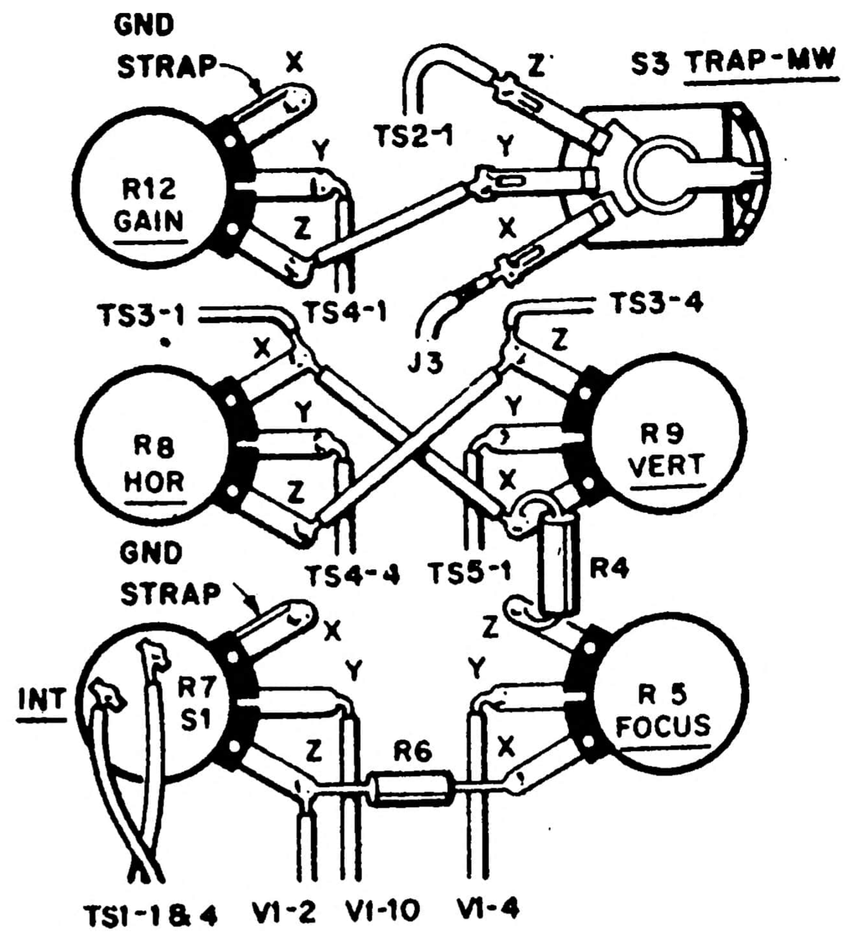

Wiring of front panel controls is shown above; power supply components below. Transformer T1 should be mounted toward rear of chassis (see photo) to avoid hum pickup by CRT V1.

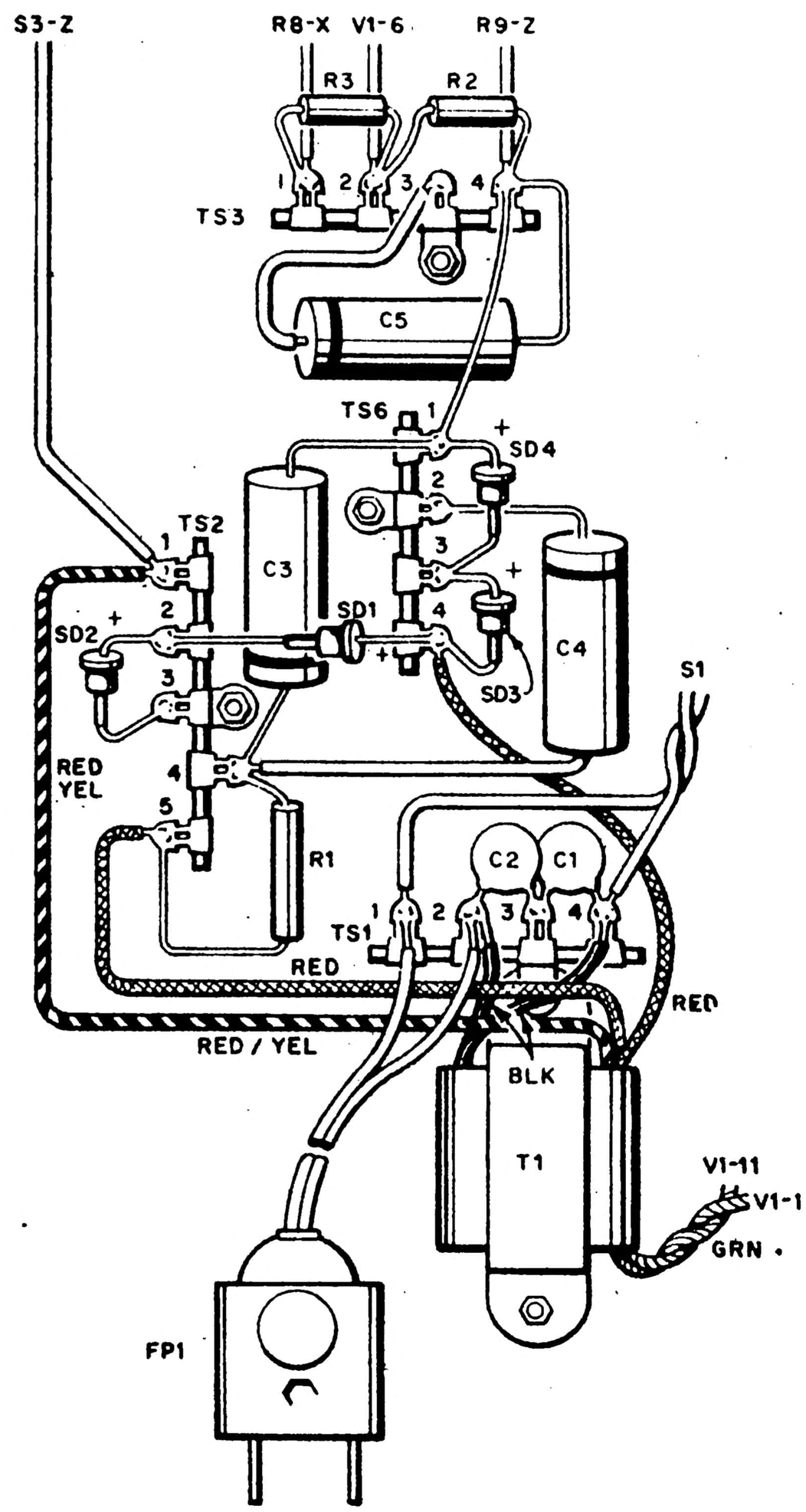

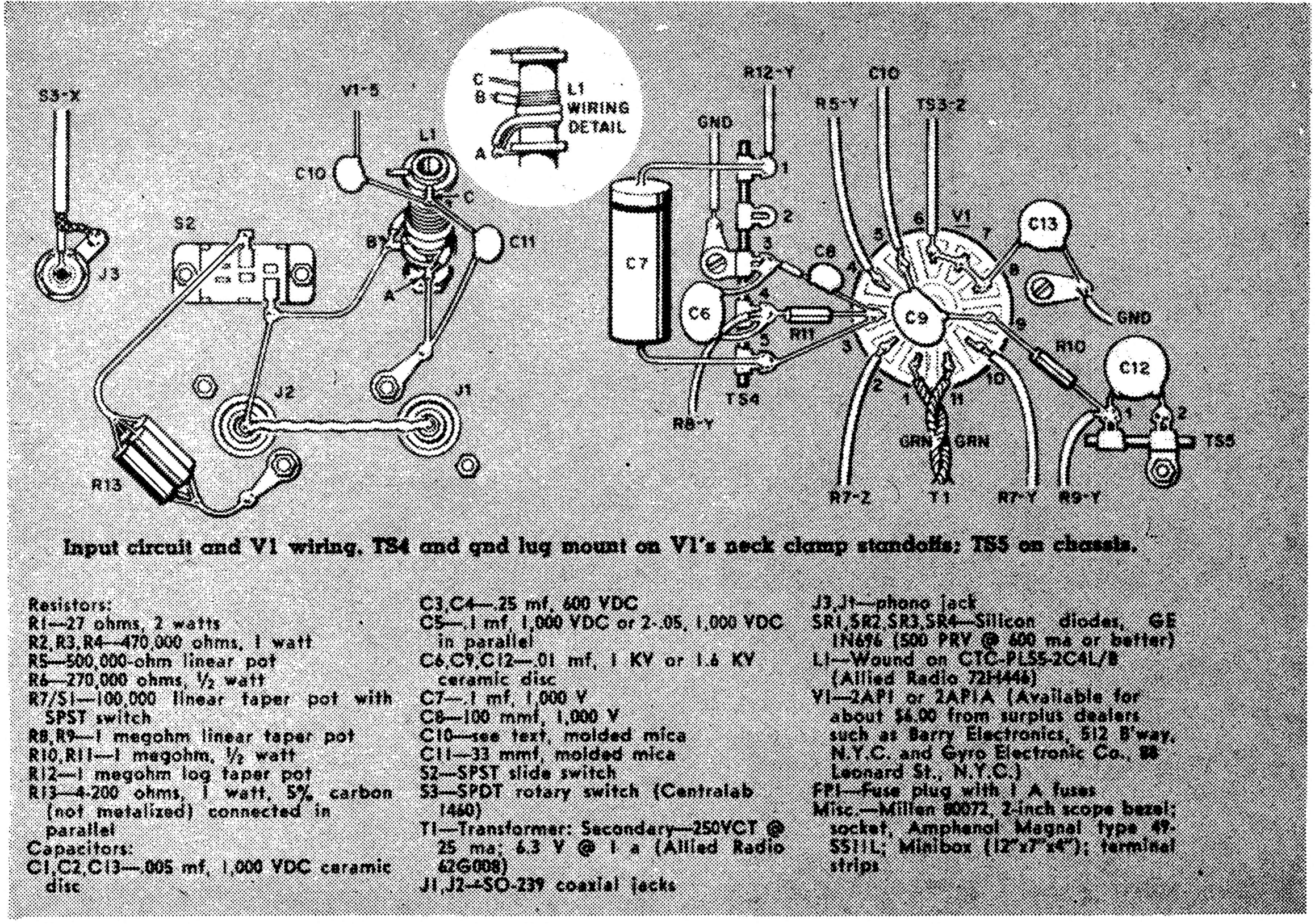

Input circuit and V1 wiring. TS4 and gnd lug mount on V1's neck clamp standoffs; TS5 on chassis.

Resistors:
R1—27 ohms, 2 watts
R2,R3,R4—470,000 ohms, 1 watt
R5—500,000-ohm linear pot
R6—270,000 ohms, ½ watt
R7/S1—100,000 linear taper pot with SPST switch
R8,R9—1 megohm linear taper pot
R10,R11—1 megohm, ½ watt
R12—1 megohm log taper pot
R13—4-200 ohms, 1 watt, 5% carbon (not metalized) connected in parallel
Capacitors:
C1,C2,C13—.005 mf, 1,000 VDC ceramic disc
C3,C4—.25 mf, 400 VDC
C5—.1 mf, 1,000 VDC or 2-.05, 1,000 VDC in parallel
C6,C9,C12—.01 mf, 1 KV or 1.6 KV ceramic disc
C7—.1 mf, 1,000 V
C8—100 mmf, 1,000 V
C10—see text, molded mica
C11—33 mmf, molded mica
S2—SPST slide switch
S3—SPDT rotary switch (Centralab 1460)
T1—Transformer: Secondary—250VCT @ 25 ma; 6.3 V @ 1 a (Allied Radio 42G008)
J1,J2—SO-239 coaxial jacks
J3,J4—phono jack
SR1,SR2,SR3,SR4—Silicon diodes, GE 1N696 (500 PRV @ 400 ma or better)
L1—Wound on CTC-PL55-2C4L/8 (Allied Radio 72H446)
V1—2AP1 or 2AP1A (Available for about $4.00 from surplus dealers such as Barry Electronics, 512 B'way, N.Y.C. and Gyro Electronic Co., 88 Leonard St., N.Y.C.)
FP1—Fuse plug with 1 A fuses
Misc.—Millen 80072, 2-inch scope bezel; socket, Amphenol Magnal type 49-5511L; Minibox (12"x7"x4"); terminal strips

Set S3 to TRAP, turn on the transmitter and speak into the microphone. Adjust R12 until a trapezoid pattern appears. Its shape will vary as you speak. At 100% modulation the trapezoid height (at the right of the CRT) will exactly double. On the left the trapezoid will come to a point at the baseline. (This is the reverse of the trapezoids shown in the illustration.) If you overmodulate

Completed CitizenScope with cover removed. Open, logical layout makes wiring this one a cinch.

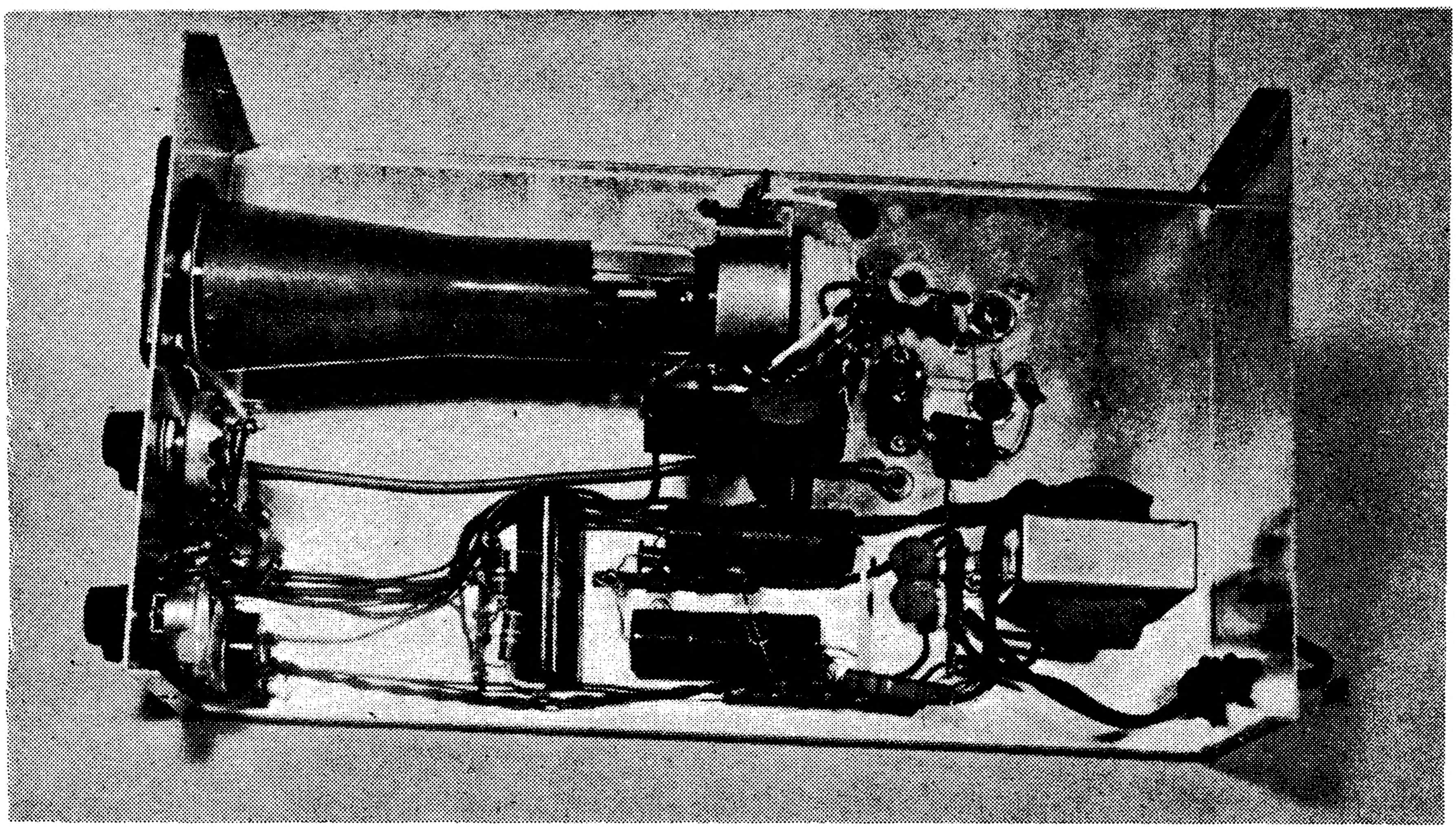

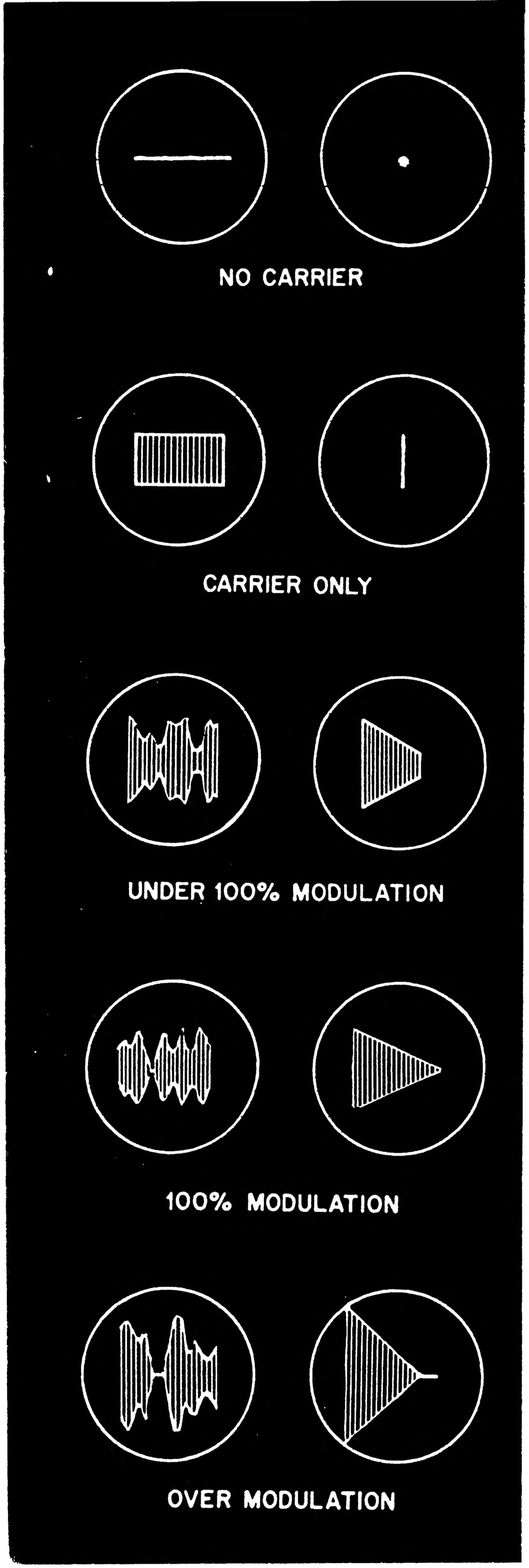

on positive peaks the trapezoid height will be more than double, but this is not important since it is the negative modulation which requires attention. The bright tail line indicates negative overmodulation—the longer the tail, the greater the overmodulation.

Optimum modulation occurs when the modulation peaks just reach 100%. A trapezoid which fails to double its size and doesn't come to a point on the baseline indicates less than 100% modulation. Actually, many CB rigs are designed for 85-100% modulation and this will be indicated on the trapezoid as just missing 100%. We suggest that you don't attempt to improve it.

By setting S3 to MW a modulation waveform will be displayed. Actually, the MW is not as effective as the trapezoid for determining modulation percentage because the MW is a constantly changing jumble of frequencies. (The MW has value for tone tests.) However, a doubling of the carrier height again indicates 100% modulation as does a collapse to the baseline. At 100% negative modulation tiny bright spots appear on the baseline (with the scope on maximum horizontal gain). If short bright *lines* instead of *spots* appear on the baseline you are exceeding 100% negative modulation. The lines are equivalent to the trapezoid's tail. The major advantage of the MW function is that it displays noise which may be present. Unmodulated RF appears as a wide pattern with clean edges. Noise, such as caused by a defective mike pre-amp plate resistor, will appear as random spikes on the edges of the pattern. Hum will appear as ripples on the edges, etc.

While the CitizenScope helps you obtain maximum effectiveness in terms of per cent modulation, it also helps tell you what the modulation *quality* is. Other types of modulation indicators cannot do this.

You'll notice that at 100% modulation the sides of the trapezoid are straight and that the positive peak is exactly double the unmodulated carrier height. This condition indicates a distortion-free modulating signal which has adequate power for 100% modulation.

If the negative modulation drives the pattern to 100% but the positive modulation flattens out and then slants downward before the carrier height doubles, the modulator is under-powered. Not only will your output signal then be under-modulated, but the modulating waveform will be distorted. Even though the speech amplifier and modulator may have checked out as distortion-free, the signal is being distorted through the *process* of modulation. Without a scope you might never detect this condition.

Insufficient RF drive to the final is another cause of distorted modulation. This type of distortion looks similar to the pattern caused by insufficient modulation power. However, instead of flattening out and then slanting down, the trapezoid pattern caused by insufficient RF drive only flattens out. Again you have a picture of distortion which is being added to the signal by the modulation process.

Parasitics, which are spurious signals produced by the transmitter, can also be indicated by the trapezoid. UHF parasitics which can produce TV interference may be indicated by a fuzzing of the trapezoid. This appears as a halo or fringing of the pattern. Parasitics, at or near the fundamental 27-mc frequency may appear as spikes.

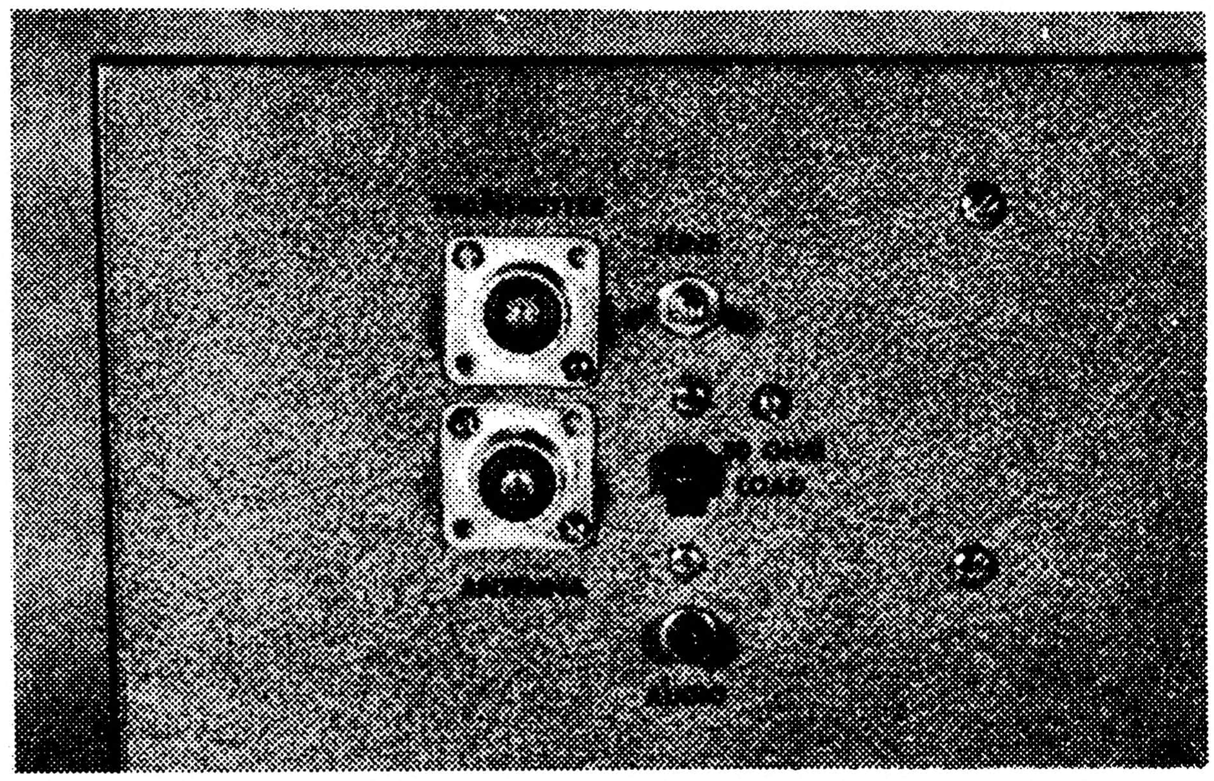

Side panel rear showing jacks J1, J2, load switch S2 and input coil L1's slug tuning adjustment.

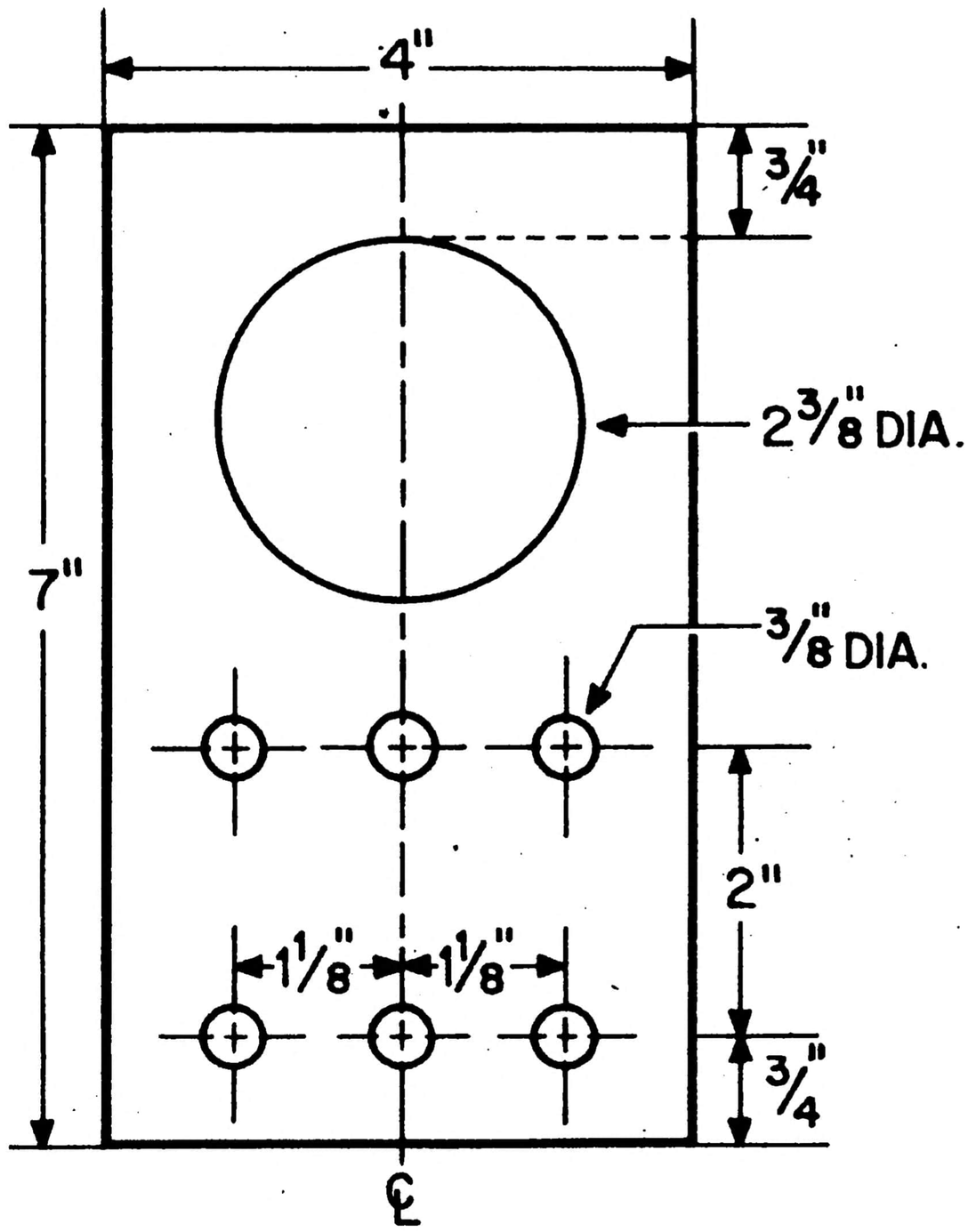

Layout of CitizenScope's front panel controls.

While you might assume that parasitics being spurious frequencies have no effect on modulation, they are part of the trapezoid and that means that at the receiving end your modulation is distorted.

As you can see the modulation process is complex. One cannot connect a low-distortion modulator and then automatically assume there's good audio quality—lots of things can go wrong between the modulator and the final signal. Only a scope can give a visual picture of the complete signal.

Space prohibits detailing all the information which can be obtained from the patterns. A thorough discussion of trapezoid and modulated wave modulation patterns may be found in the Radio Amateurs Handbook.

The CitizenScope may be left permanently connected in the transmission line, permitting continuous monitoring. Connect the transmitter to J1 and the antenna to J2. Set S2 so the dummy load is *out* of the circuit. Adjust L1 for minimum SWR (standing wave ratio) or maximum field strength reading *from the antenna*. When L1 is properly adjusted the CitizenScope will have no adverse effect on SWR.