Project 645

How to get into robotics without boiling your brain cells or breaking the bank

Part 2

Allan Branch
Flexible Systems, Hobart, Tasmania

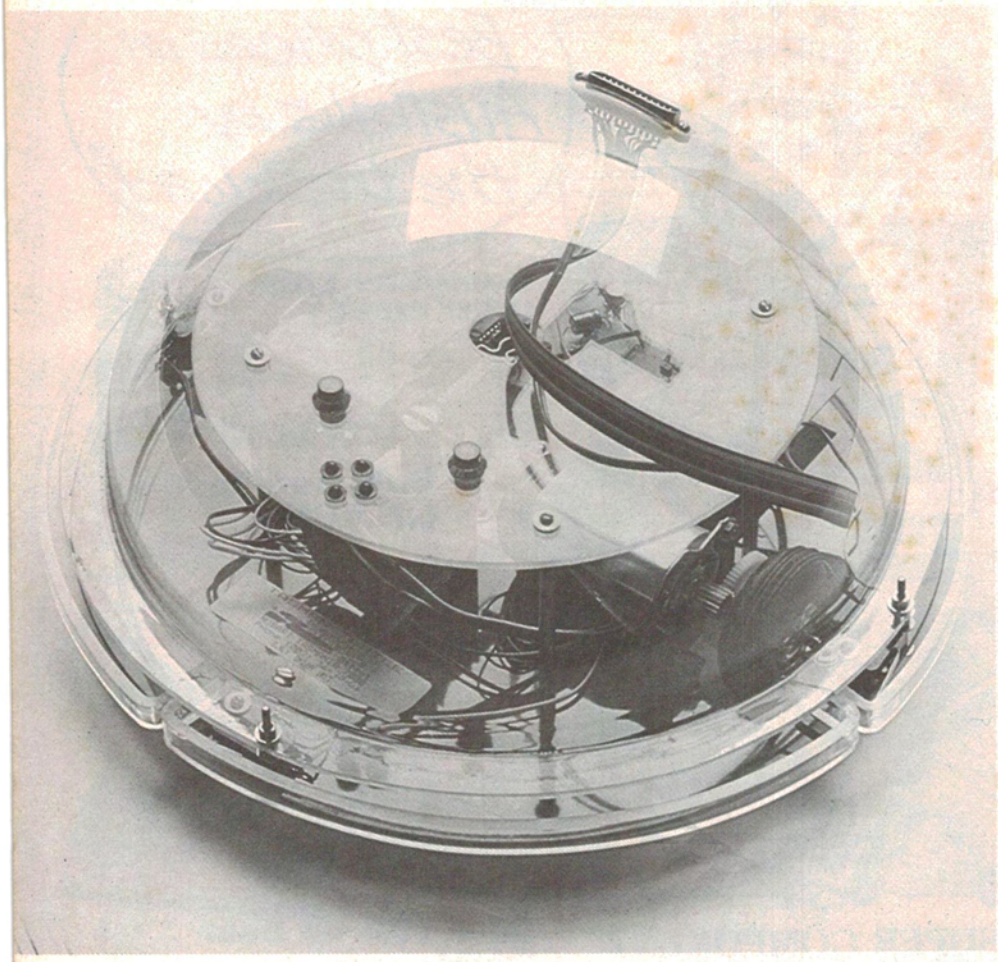

THE NEXT phase of construction involves the control board electronics.

Control board

Have a look at the pc board and orientate it so that it matches the component overlay diagram (Figure 11) here so that you can recognise where the components are placed. When looking at the track side of the pc board you will notice a cut track beneath the Q9 and Q10 positions. These two transistors drive the pen solenoid, which was previously mounted on the base. Now that it is mounted in an inverted position, the solenoid drive needs to be inverted and this modification, plus a link, effects that. All components mount on the non-copper side of the pc board, with the exception of R13.

First thing to do is identify all the components from the parts list. There are four IC sockets, one 8-pin, one 14-pin and two 16-pin sockets. These should be soldered into the pc board first. Make sure you orientate them correctly — the corner adjacent to pin 1 will be chamfered. All the transistors should be soldered in place next. Identify Q4, Q6, Q8 and Q10 — these are the four metal can types. A little tab on the base of the can adjacent to one lead indicates that it is the emitter lead. Solder these transistors in position, ensuring they sit right down on the pc board. All the other transistors are BC548s in small (TO-92) plastic cases. Mount Q3, Q5, Q7 and Q9 next — note that Q9 is turned so that the flat on the case faces out from the board (bend the base lead backwards) while the others have their flats facing inwards. Now solder the rest of the transistors into place. Always watch orientation.

All resistors may be soldered in place next. They are not polarised components so it doesn't matter which way round they go. Note that R13 is placed on the copper side of the pc board. Mount it so that it sits up off the board a little. Solder the lead that goes to the base lead of Q10 first. Then solder the other lead. Having done that turn the board over and cut off the free lead protruding through the top of the board, leaving about 6-8 mm projecting to allow later connection of a lead.

At this stage all the links can be inserted and soldered in place. Note that there are seven links in all. The link running from pin 1 of IC3 to pin 3 of IC4 needs to be made of a length of insulated hookup wire. There is a link under the pc board that connects the emitter of Q9 to the emitter of Q10. This too should be ▶

PARTS LIST — ETI 645 TURTLE ROBOT CONTROL BOARD

Resistors ..... **all ½W, 5% unless noted**

R1, 2, 6, 9, 10, 11, 12	15k
R4, R5	47k
R7, R8	1k
R13	470R
R14, 18, 22	100R, 1W
R15, 16, 19, 20, 31 32, 33, 34	10k
R17, R21	680R
R23,24,25,26	4k7
R27, 28, 29, 30, 35	560R

Capacitors

C1, 2, 3	100n ceramic
C4, C5	47u/25 V electro.

Semiconductors

Q1, 2, 3, 5, 7, 9, 11 12, 13, 14	BC547
Q4, 6, 8, 10	2N2102
IC1, IC2	SAA1027
IC3	74C04 or 4069
IC4	555
LEDs 1-5	TIL220R or similar large red LEDs

Miscellaneous

Turtle control pc board (BD1); 2 x 16-pin IC sockets; 1 x 14-pin IC socket; 1 x 8-pin IC socket.

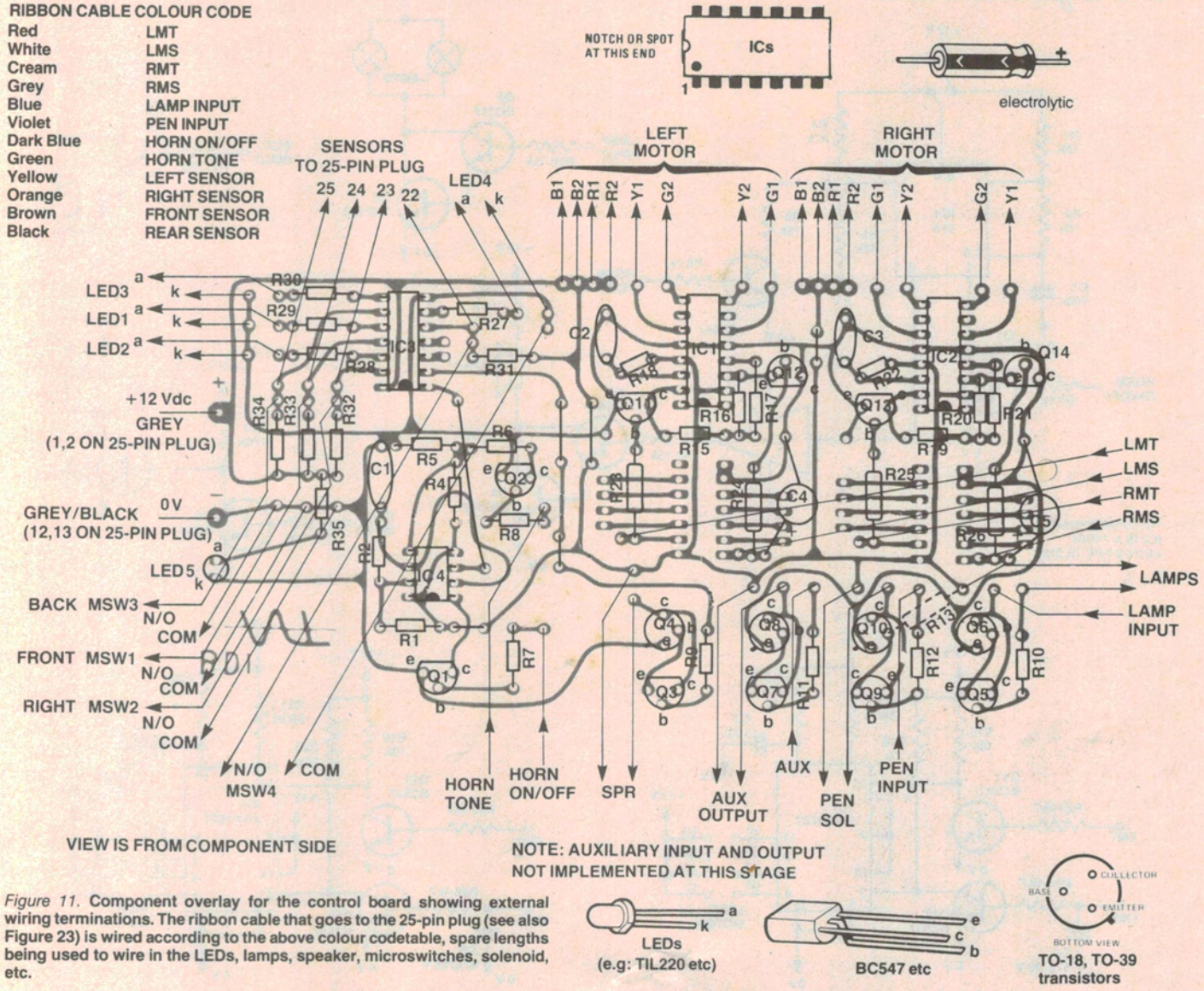

Figure 11. **Component overlay for the control board showing external wiring terminations. The ribbon cable that goes to the 25-pin plug (see also Figure 23) is wired according to the above colour codetable, spare lengths being used to wire in the LEDs, lamps, speaker, microswitches, solenoid, etc.**

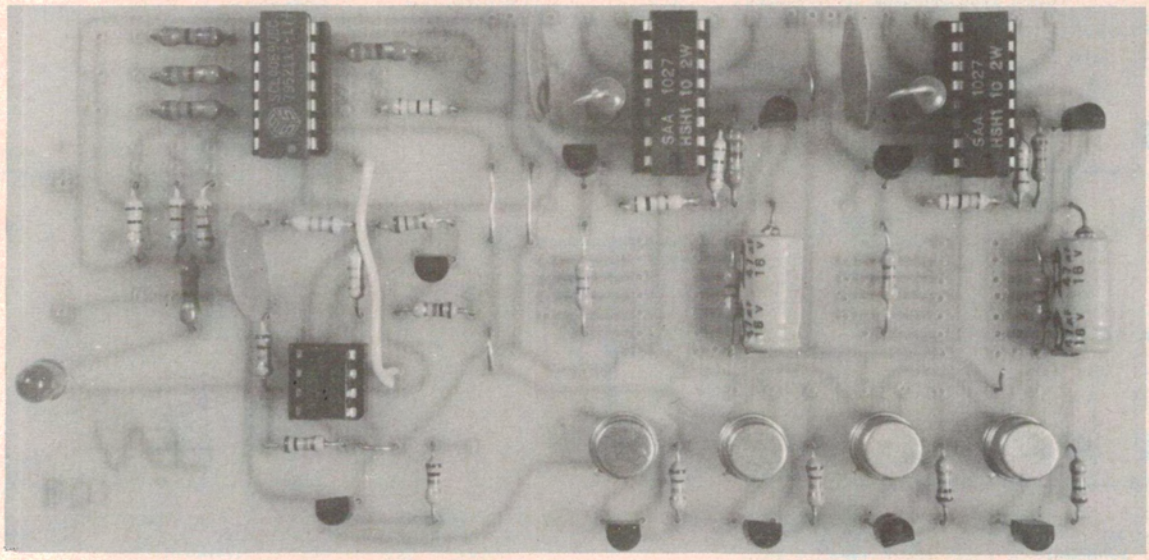

The completed control board, prior to attaching the various cables.

Project 645

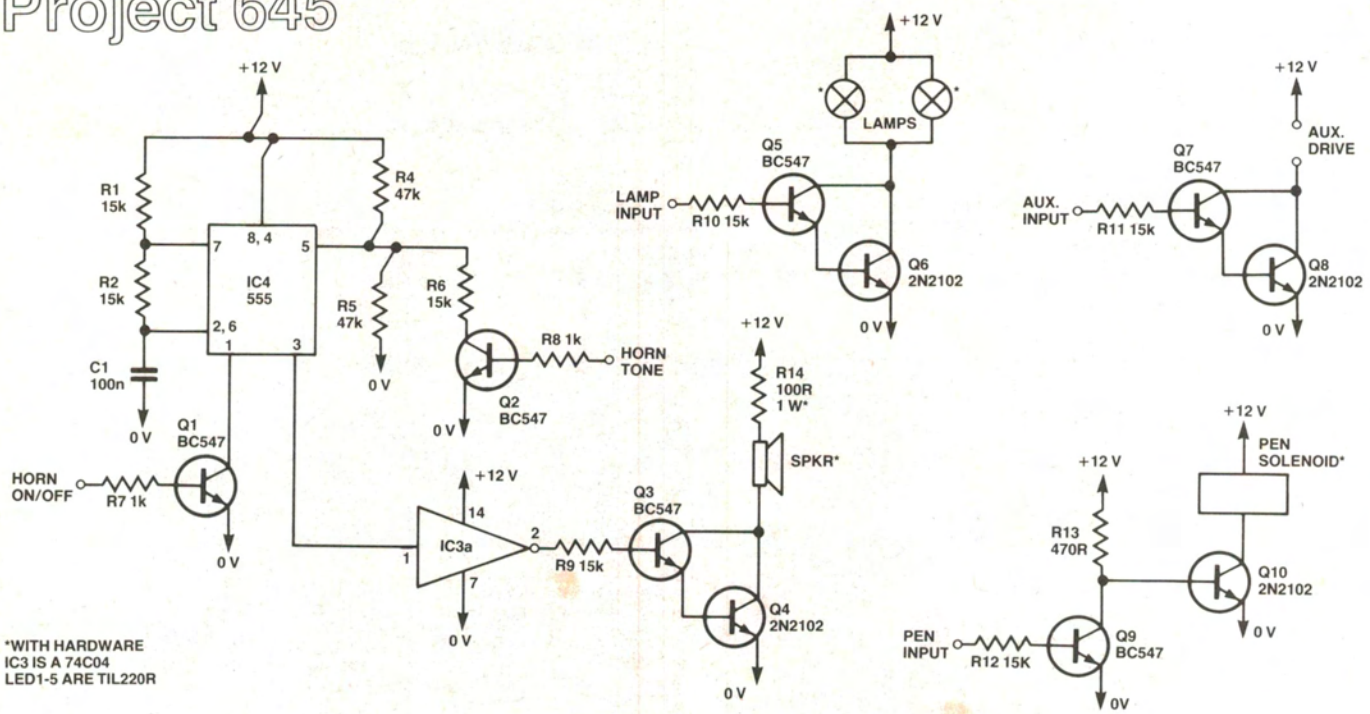

*WITH HARDWARE
IC3 IS A 74C04
LED1-5 ARE TIL220R

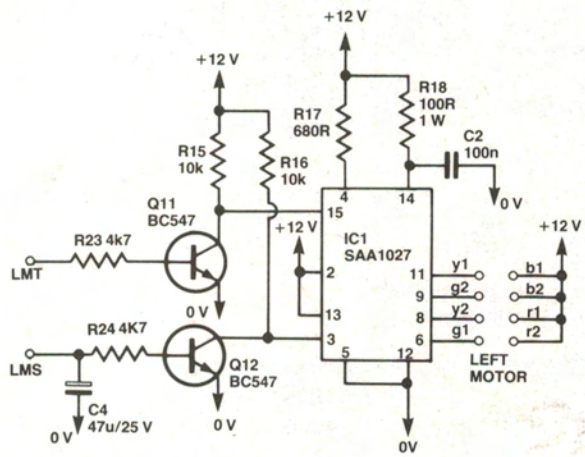

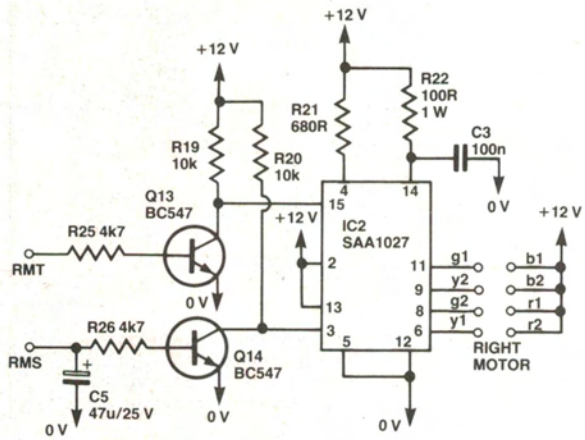

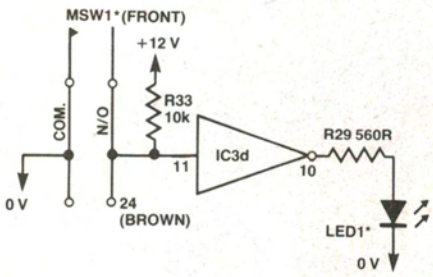

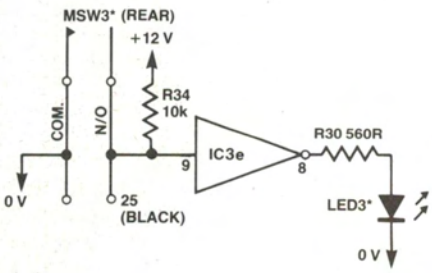

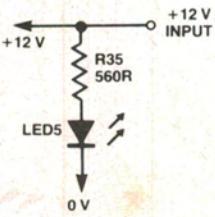

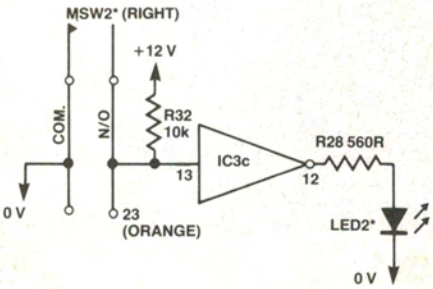

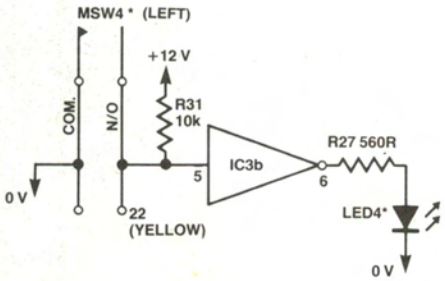

TURTLE CONTROL BOARD — HOW IT WORKS

There are five circuit groups on the control board comprising: left and right motor control, microswitch 'sensors', horn, pen, lamps and auxiliary control.

MOTOR CONTROL

The motors used to propel the Turtle are stepper motors. This is not the place for a dissertation on stepper motors, so their description will be necessarily brief. Suffice to say that the shaft of a stepper motor can be rotated in discrete 'steps' by the application of pulses to the motor windings in the correct phase sequence. Reversing the phase of the pulse sequence reverses the direction of rotation of the shaft. The motors in the Turtle have a shaft rotation of 7.5° per 'step', giving a linear displacement of around one millimetre. Maximum speed is about two revolutions per second with 100 pulses per second drive.

Here, a special IC provides the motor control — IC1 for the left motor, IC2 for the right. Both are type SAA1027. The output pins — 6, 8, 9 and 11 — provide the correct drive to the motor windings. There are two control pins on the SAA1027. Pin 15 accepts the pulse train for driving the motor and pin 3 controls the phase of the pulses sent to the motor windings and thus the direction of shaft rotation.

As the operation of each motor drive circuit is essentially similar, we will only describe the operation of the left motor drive circuit. The LMT input ('Left Motor Toggle') is a series of pulses that drive Q11 on and off. This signal is inverted at the collector, which drives pin 15 of the SAA1027. The LMS input ('Left Motor Set') is set high or low to determine the direction of rotation of the motor shaft. Setting LMS low and RMS high while pulsing (or toggling) the LMT and RMT inputs will move the Turtle forward. A complete description of the logic operation is given later in this series.

MICROSWITCH SENSORS

The microswitch 'sensor' circuitry is pretty straightforward. There are four switches mounted around the circumference of the Turtle base: front, rear, left and right. Each switch connects directly to the 25-pin plug on the dome and communicates directly with the computer or whatever is controlling the robot. No switch debouncing is provided as this is done in software or by external circuitry if necessary. The sensor circuitry comprises MSW1 to MSW4, IC3 and LED1 to LED4. Each microswitch sensor is 'normally open'. When the sensor ring meets an object, say at the front of the Turtle, then MSW1 operates and the contacts close. This will pull the input (pin 5) of IC3b, an inverting buffer, low. Now the input of IC3b is normally pulled high via R31, which goes to the +12 V supply rail. Thus the output of IC3b, pin 6, will be low and no current will flow through LED1, which will be unlit. When MSW1 operates and pulls pin 5 of IC3b low, the output (pin 6) goes high, driving current through LED1, which lights, indicating which switch sensor has been operated.

Pin 22 of the 25-pin plug on the dome will also be high when MSW1 is not actuated, going low when it is. These two conditions are interpreted by the controlling computer or external circuitry (such as a manual controller) to determine the next action sequence of the robot.

All the microswitch sensors work in the same way, so a similar explanation applies.

HORN

The horn circuitry involves Q1, Q2, Q3 and Q4, IC4, one gate from IC3 and the speaker. There are two inputs to the horn circuit: HORN ON/OFF (pin 20 of the 25-pin plug) and HORN TONE (pin 21 of the 25-pin plug). IC4, a 555 timer, is connected as a gated astable oscillator. When the HORN ON/OFF input is driven high, Q1 turns on, turning on IC4 by pulling pin 1 low. Ignoring Q2 and R6 for the moment, IC4 will commence to oscillate. Its output drives the input of IC3a, one buffer from the hex buffer chip IC3. The output of IC3a, pin 2, then drives the input of a Darlington pair, Q3 and Q4, the collectors of which drive the speaker, and thus you hear the horn at a particular pitch, which is the LOW pitch in this case. When the HORN TONE input is driven high at the same time as the HORN ON/OFF input, Q2 is driven on, connecting R6 across R5, and causing the oscillation frequency of IC4 to increase, thus sounding the HIGH pitch of the horn.

PEN

The pen solenoid, mounted on the inner plastic disc, holds the pen in a clamp. The pen is lowered to 'draw' and raised when 'not drawing'. As the solenoid is mounted on the inner plastic disc, it needs to be operated to raise the pen in the 'not drawing' mode. When drawing, any unevenness in the surface will simply push the pen and solenoid plunger up and down, following the surface contour.

The pen circuit involves Q9, Q10 and the pen solenoid. When the PEN INPUT (pin 19 of the 25-pin plug) is low, Q9 is off and base current, via R13, turns Q10 on, operating the solenoid and raising the pen. When the PEN INPUT is high, Q9 is driven on and its collector current 'pulls' the base of Q10 low and Q10 turns off. The solenoid then releases and the pen is dropped down through the Turtle base to the surface on which it stands.

LAMPS & AUXILIARY

The lamp and the auxiliary drive circuits operate in the same way, so the description of the lamp circuitry will serve for both.

The lamp drive circuitry involves Q5 and Q6, which are connected as a Darlington pair. When the LAMP INPUT (pin 18 of the 25-pin plug) is low, no collector current flows in either Q5 or Q6 and the lamps are unlit. When the LAMP INPUT is driven high, Q5 and Q6 turn on and they draw collector current via the two parallel-connected lamps, which thus light up.

Note that the AUX.INPUT is not connected to the 25-pin plug and this facility is not implemented at this stage.

of insulated hookup wire. The placement of this link, and R13, is shown in the accompanying photograph, Figure 12. Last of all, mount the five capacitors. The two electrolytic capacitors, C4 and C5, need to be orientated correctly. Identify their positive (+) and negative (−) leads and place them as shown on the component overlay, Figure 11.

Having completed the assembly, check it over thoroughly and with care, making sure all components are in their correct positions and correctly orientated.

The four ICs may now be inserted in their respective sockets. Leave IC3 till last. This is a CMOS type and should be handled with care. Only pick it up by the two ends and avoid handling the pins.

Figure 12. **View of R13 and the link under the board.**

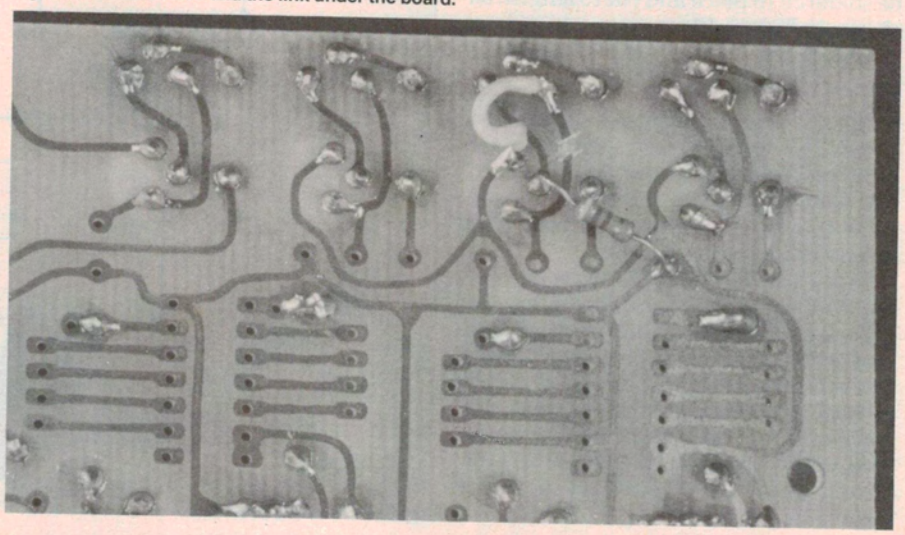

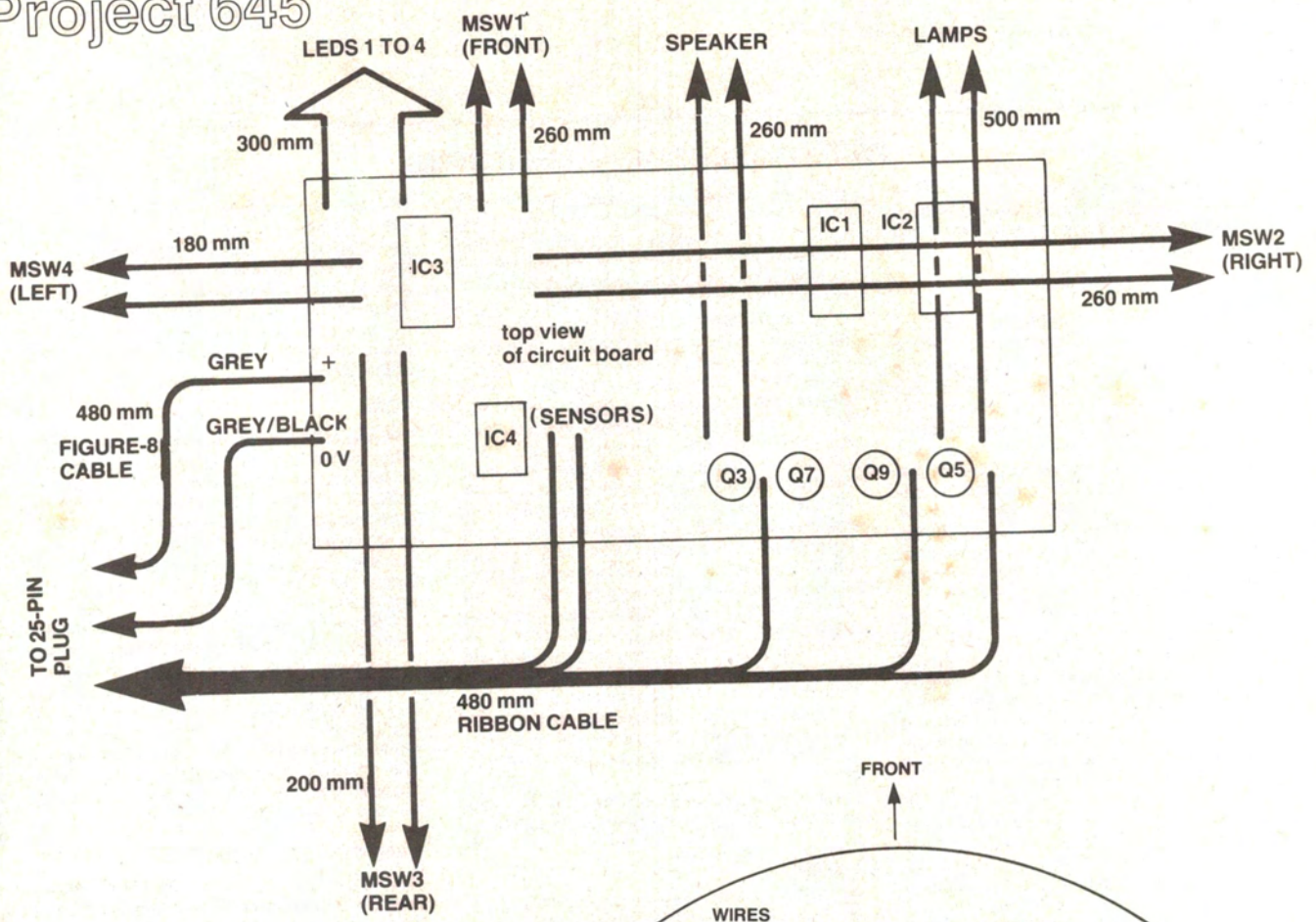

Figure 13. **Lengths to cut the cables that run from the control board. Note that this drawing is only diagrammatic and does not indicate the actual termination points or dressage of each cable. The overlay, Figure 11, shows termination points, Figure 14 and 15 show dressage.**

The various cables that connect the control board circuitry to the other components mounted on the Turtle can now be soldered in place and cut to length, as shown in Figure 13.

Internal wiring

Take the completed circuit board and place it so that ICs 1 and 2 face forward and the components are facing up. At this stage just leave the wires trailing from the board ready to be routed to various parts of the Turtle.

Screw the four ½" threaded spacers to the four disc mounting holes on the base, using ⅛" x ¼" screws and a washer under the base on each screw. These screws must be tight. The circuit board is then temporarily screwed to the two spacers at the back using short screws. The wires from the board can now be routed under the motors, as shown in Figure 14.

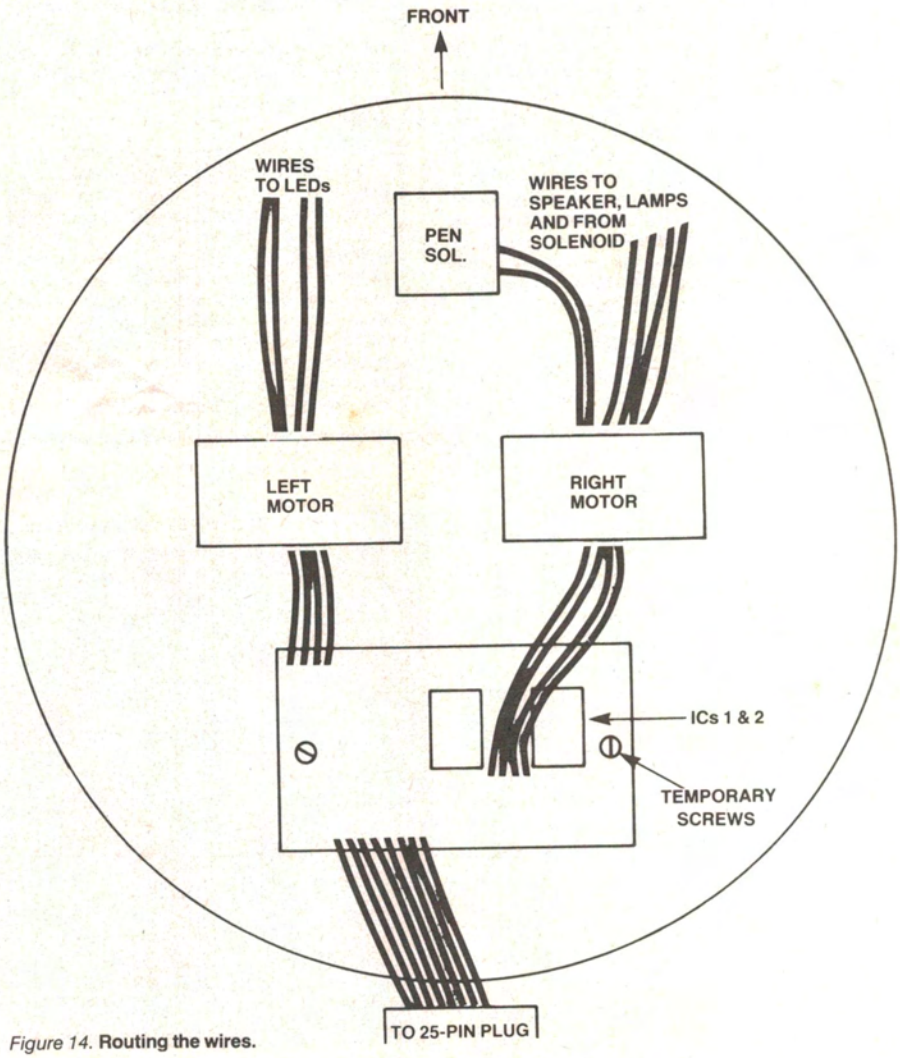

Figure 14. **Routing the wires.**

NOTES

There are a number of things we omitted from the last article which should be noted as they will assist construction:

Figure 5 (page 33): The screw used to secure the rear motor elbow bracket to the motor is the same screw that holds the rear plastic cover of the motor, as supplied.

Figure 9 (page 35): The drawing of the inner plastic disc shows it from the **underside.**

Adjusting the wheel mounting: If you can't get the wheels to turn freely after mounting the motor and adjusting the fittings, try putting a washer between the small elbow wheel axle bracket and the top of the base (best of all — use the washer between the nut and the base, as per Figure 4 on page 32, and screw the nut against the base).

DEMONSTRATIONS

See the Turtle — live!

Walking, beeping, flashing, meandering and whatever. With the kind co-operation of several computer retailers, we have arranged for demonstrations of the Tasman Turtle, as featured here, to be carried out in our Sydney and Melbourne offices as follows:

Sydney: 4th Floor, 15 Boundary St Rushcutters Bay. Monday to Thursday, 4:30 — 6:00 pm.

Apple II computer used for demonstrations supplied with the kind co-operation of Imagineering Pty Ltd, 22 Sir John Young Crescent, Woolloomooloo.

Melbourne: Murray Publishers, 22nd Floor 150 Lonsdale St, Melbourne. 662-1222.

Apple II computer used for demonstrations supplied with the kind co-operation of Computer Country Pty Ltd, 338 Queen St, Melbourne.

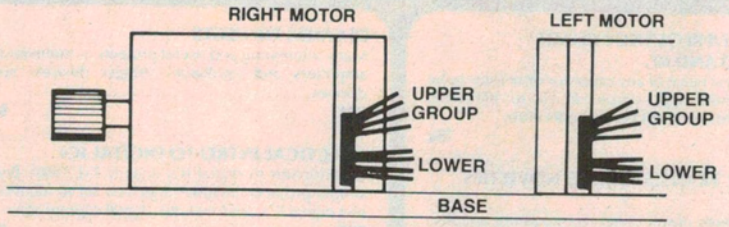

Figure 17. **Identifying the groups of motor wires.**

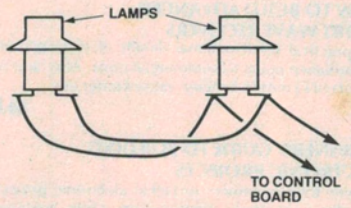

Figure 16. **Wire the two lamps in parallel.**

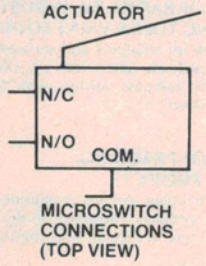

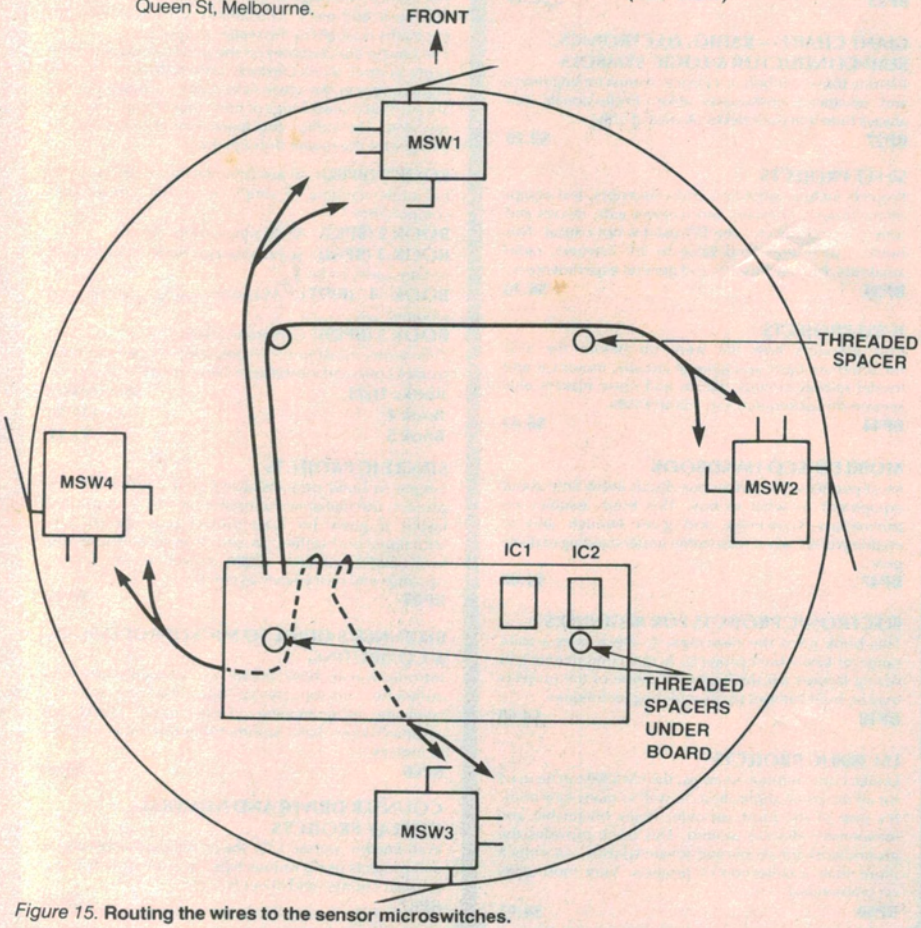

Figure 15. **Routing the wires to the sensor microswitches.**

Run the wires to the microswitches (MSW1 to MSW4) around the spacers, as shown in Figure 15, and solder the appropriate wire to the N/O (normally open) and COM (common) terminal of each microswitch. The appropriate wires can be identified from the component overlay, Figure 11. Now solder the solenoid wires to the two locations on the board (any wire to each hole). Next solder the lamps on the inner disc as shown in Figure 16 so that the two lamps are in parallel, and then solder the appropriate cable from the pc board to them.

The motor wires, which are still hanging out from the motors towards the front, are tucked under the motor so that a loop is formed and then brought up to the circuit board. Each wire from the stepper motors is identified separately and must be soldered to the circuit board in the correct sequence so the motors will operate properly. *It is important to take your time at this stage* to make sure everything is done carefully.

When viewed from the front of the Turtle the wires emanating from the front of each motor are divided into two groups of four wires each, one set from the uppermost hole and one from the hole closest to the base on each motor (Figure 17).

Each group has four different colour-coded wires:

UPPER		LOWER	
Grey	G1	Grey	G2
Yellow	Y1	Yellow	Y2
Red	R1	Red	R2
Black	B1	Black	B2

These wires are designated as shown above. Remove the two temporary screws holding the circuit board. Then solder the motor wires into the control ▶

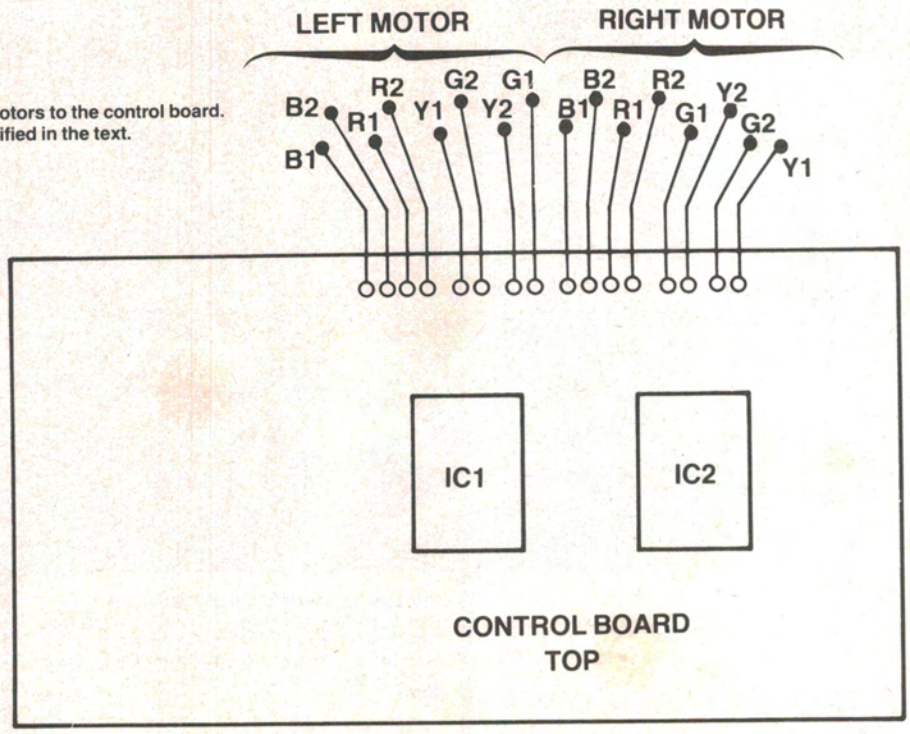

Figure 18. **Wiring the motors to the control board. Colour codes are identified in the text.**

board, as shown in Figure 18. (See also Figure 11, the component overlay). When this is finished, all the wires on each side can be gathered and tied with a cable tie or short length of hookup wire. Attach the tie on the cables between the motors and the control board.

LED wiring

The four LEDs on the inner disc are now wired to the control board. Refer to Figure 11, the component overlay, and Figure 19 here to see how each is connected. Take care with the polarity of the LEDs and make sure they are wired in the correct order. If the wiring for the LEDs is incorrect then those with wrong polarity will not work or a LED will incorrectly indicate which microswitch has been activated.

Last of all, solder the speaker wires from the control board to the speaker and resistor (any wire to each).

Inner disc assembly

At this stage you will have the control board largely wired in, save for the 25-pin plug, with the loudspeaker trailing around and the inner plastic disc attached by several 'umbilicals'.

The general assembly of the inner disc and control board to the main base is shown in Figure 20. Note that there are spacers either side of the control board. This allows another pc board to be added to the Turtle later on, mounted between the 2" spacer and the ½" spacer beneath it.

With the inner disc mounted, the speaker is positioned next. Place the speaker's magnet on the pen solenoid frame (which faces the front of the Turtle). The magnet will hold it temporarily in place, allowing you to ▶

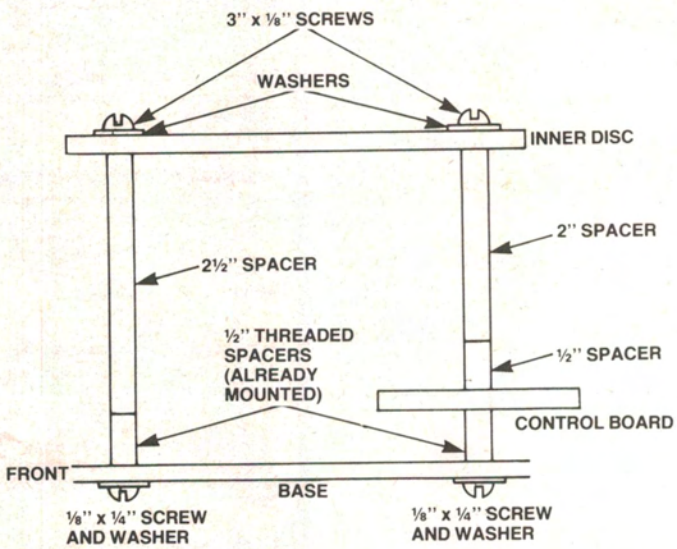

Figure 20. **Assembling the inner disc and control board to the Turtle base.**

Figure 19. **Identifying the four LEDs on the inner disc.**

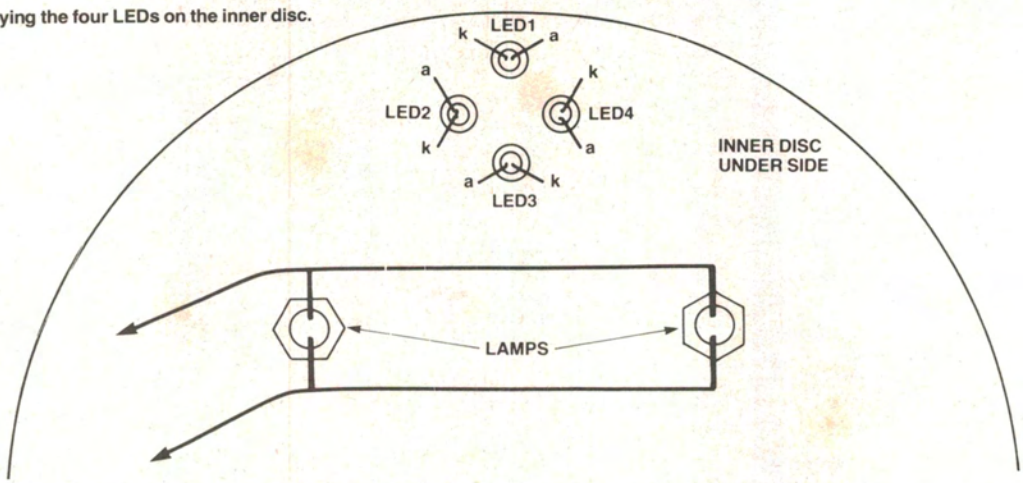

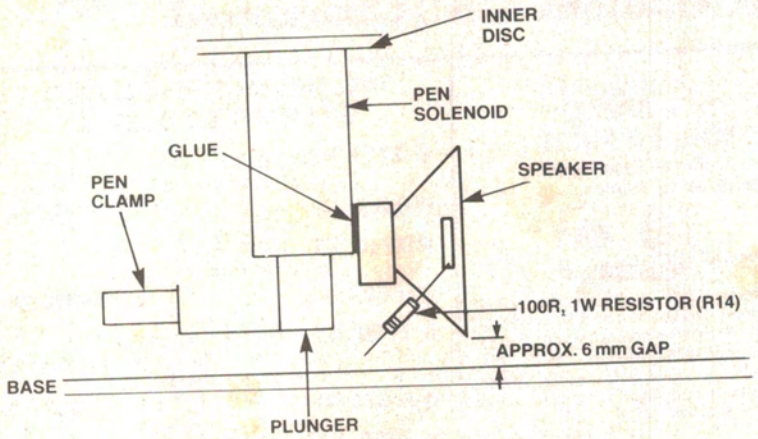

Figure 21. **Mounting the speaker.**

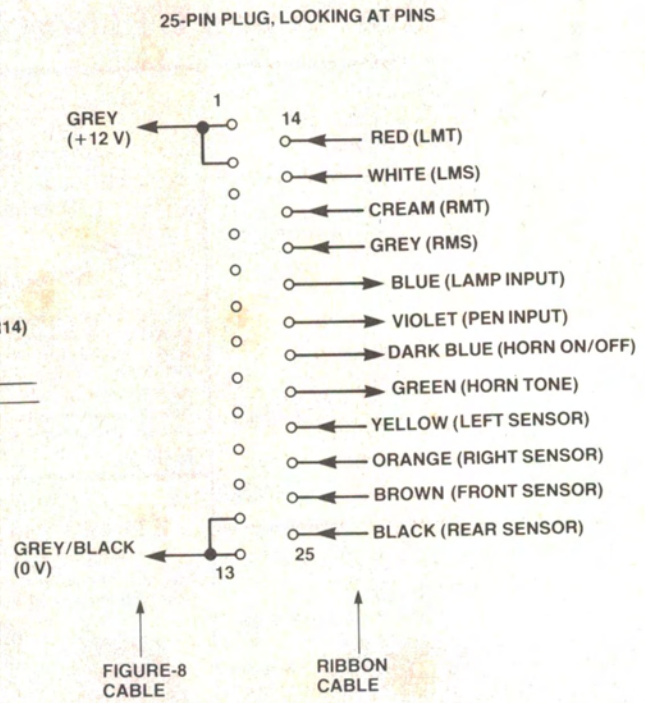

Figure 23. **Wiring the 25-pin plug to the ribbon cable and figure-eight (12 Vdc) cable.**

adjust the speaker's position such that the bottom of its rim is about 6 mm above the Turtle base, as shown in Figure 21. Secure the speaker with latex glue, (e.g: Silastic or similar).

'Bump' band and dome

The sensor or 'bump' band and dome are assembled next. Place the sensor band on the base and around the four microswitches so that it can move freely. The band just sits there with its four short spokes holding it on the base. If the band doesn't return when operated or if it grabs for some reason, check that wiring is not interfering with it.

It is important to have a small space between the microswitch actuator and the band (about 3-4 mm). The switch may have to be adjusted to ensure this gap is sufficient.

Next screw the 25-pin plug into the dome without using washers and with the nuts on the inside (Figure 22). Now wire it up. The pin designations are in Figure 23 and you will need to refer to Figure 11 (component overlay) to identify the wires. Check it carefully when you have finished.

With the 25-pin plug all wired up, the dome can be assembled to the base. Place two washers on each large screw holding the microswitches (Figure 8b in Part 1). Place the dome over these screws so that the 25-pin plug faces to the rear of the Turtle. Push the dome down over the screws and secure it with a nut and washer on each of the four screws around the base.

Now you are ready to roll! ●

(. . . to be continued)

Figure 22. **Mounting the 25-pin plug to the dome.**

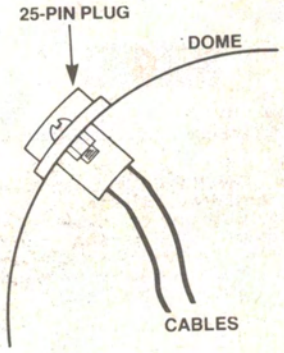
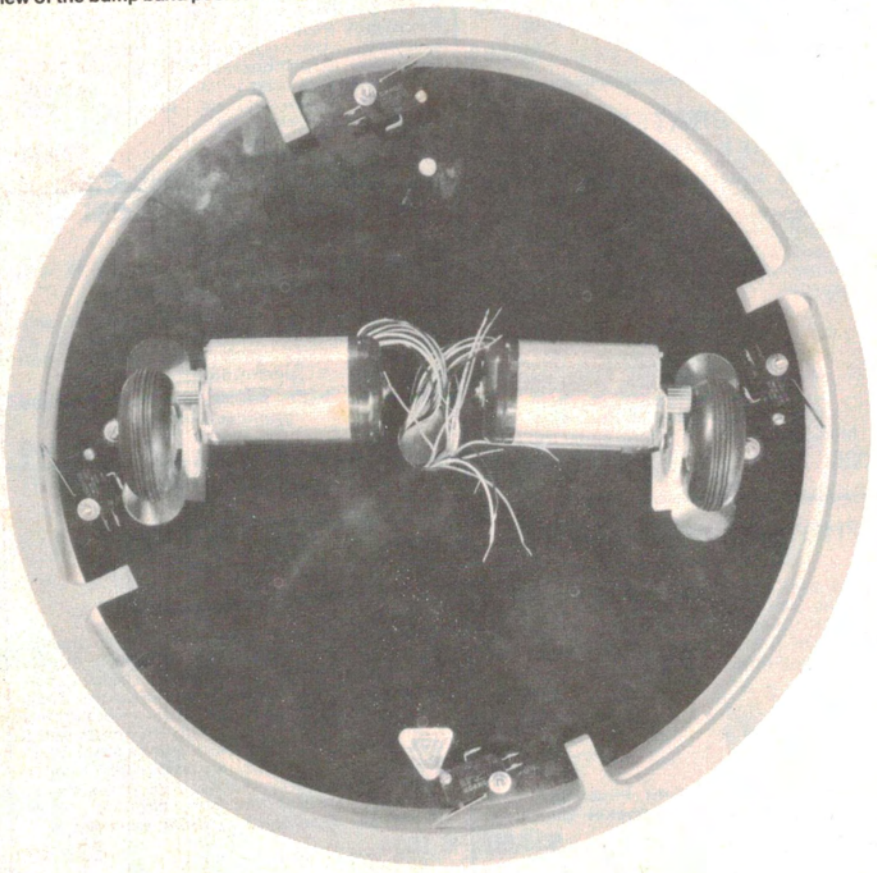
View of the bump band positioned on the base. (Shown prior to rest of assembly for clarity).