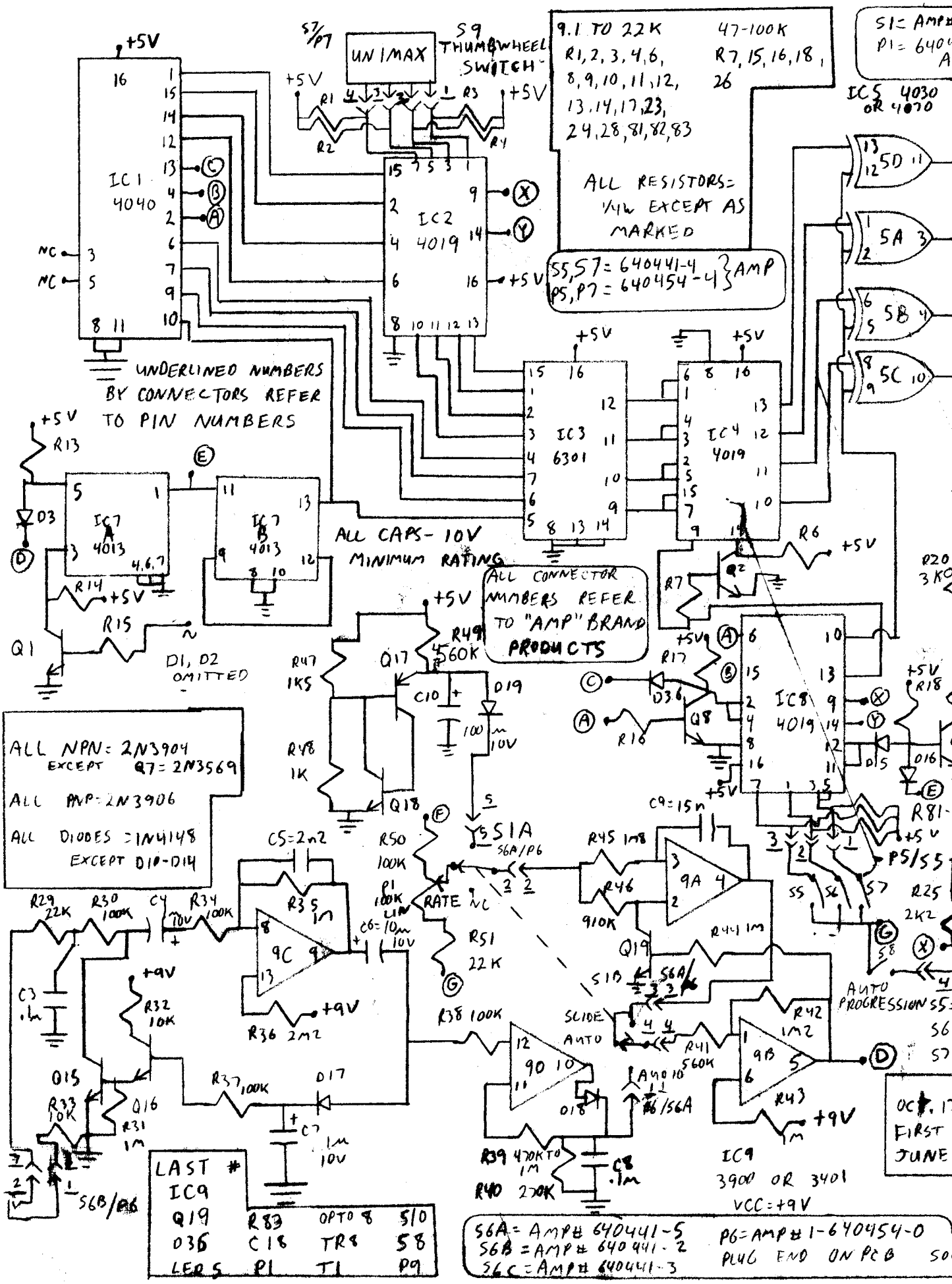
+5V
IC1 4040
NC
NC
UNDERLINED NUMBERS BY CONNECTORS REFER TO PIN NUMBERS
S7/P7
UNIMAX
S9 THUMBWHEEL SWITCH
R1
R2
R3
R4
IC2 4019
9.1 TO 22K R1,2,3,4,6,8,9,10,11,12,13,14,17,23,24,28,81,82,83
47-100K R7,15,16,18,26
ALL RESISTORS= 1/4W EXCEPT AS MARKED
S5,S7 = 640441-4
P5,P7 = 640454-4
AMP
S1 = AMP
P1 = 640
IC5 4030 OR 4070
5D
5A
5B
5C
IC3 6301
IC4 4019
R6
R7
Q2
R20 3K
ALL CAPS- 10V MINIMUM RATING
ALL CONNECTOR NUMBERS REFER TO "AMP" BRAND PRODUCTS
R13
D3
IC7 A 4013
IC7 B 4013
R14
R15
Q1
D1, D2 OMITTED
R47 1K5
Q17
R49 560K
C10
D19
100 10V
R48 1K
Q18
R17
D36
Q8
R16
IC8 4019
R18
D15
D16
R81
P5/S5
S5
S6
S7
R25 2K2
AUTO PROGRESSION
ALL NPN= 2N3904 EXCEPT Q7= 2N3569
ALL PNP= 2N3906
ALL DIODES = 1N4148 EXCEPT D18-D14
C5=2n2
R50 100K
P1 100K LIN
RATE
NC
R51 22K
S5A
S6A/P6
R45 1M8
R46 910K
9A
C9=15n
Q19
R44 1M
S10
SLIDE
AUTO
R29 22K
R30 100K
C4 10V
R34 100K
R35 1M
9C
C6=10m 10V
C3 .1m
R32 10K
R36 2M2
R38 100K
R42 1M2
R41 560K
9B
R43 1M
Q15
R33 10K
Q16
R31 1M
R37 100K
D17
C7 1m 10V
9D
D18
R39 470K TO 1M
R40 270K
C8 .1m
S6B/P6
S6/P6
IC9 3900 OR 3401
VCC=+9V
LAST # IC9 Q19 D36 LED5
R83 C18 P1
OPTO 8 TR8 T1
S10 S8 P9
S6A = AMP# 640441-5
S6B = AMP# 640441-2
S6C = AMP# 640441-3
P6 = AMP# 1-640454-0
PLUG END ON PCB
OCT. 17
FIRST
JUNE

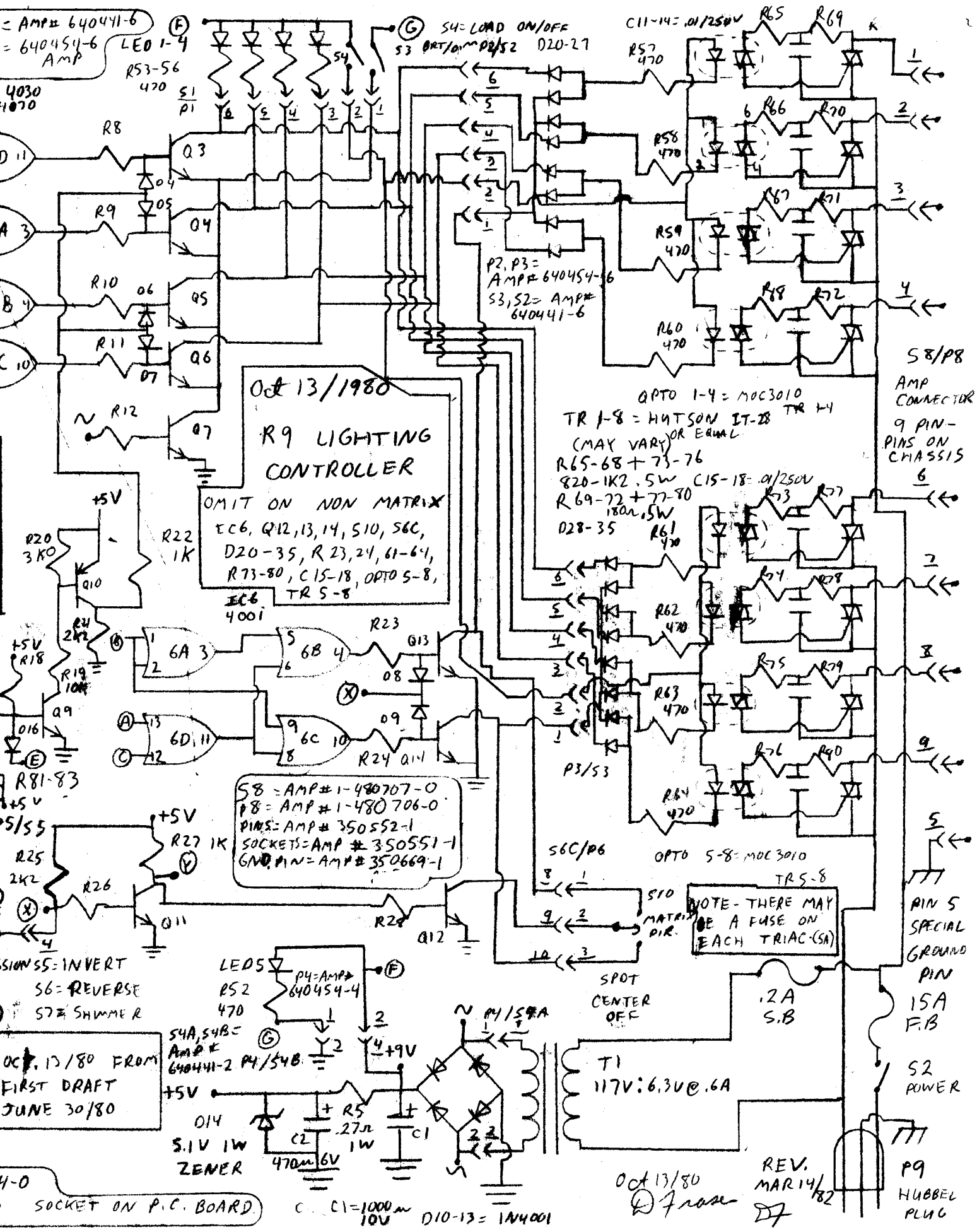
= AMP# 640441-6
= 640454-6 AMP
LED 1-4
R53-56 470
S1/P1
S4 = LOAD ON/OFF
S3 ART/OMP P2/S2
D20-27
C11-14 = .01/250V
R57 470
R58 470
R59 470
R60 470
R65
R69
R66
R70
R67
R71
R68
R72
R8
Q3
Q4
Q5
Q6
Q7
R9
R10
R11
R12
P2, P3 = AMP# 640454-6
S3, S2 = AMP# 640441-6
Oct 13/1980
R9 LIGHTING CONTROLLER
OMIT ON NON MATRIX
IC6, Q12, 13, 14, S10, S6C, D20-35, R23, 24, 61-64, R73-80, C15-18, OPTO 5-8, TR 5-8
OPTO 1-4 = MOC3010
TR 1-8 = HUTSON IT-28 OR EQUAL (MAY VARY)
TR 1-4
R65-68 + 73-76 820-1K2, .5W
R69-72 + 77-80 180Ω, .5W
D28-35
C15-18 = .01/250V
R61 470
R62 470
R63 470
R64 470
S8/P8
AMP CONNECTOR
9 PIN-PINS ON CHASSIS
+5V
R20 3KO
R22 1K
Q10
R24 2K2
R18
R19 10K
Q9
D16
R81-83
IC6 4001
6A
6B
6C
6D
R23
Q13
D8
D9
R24
Q14
P3/S3
S8 = AMP# 1-480707-0
P8 = AMP# 1-480706-0
PINS = AMP# 350552-1
SOCKETS = AMP# 350551-1
GND PIN = AMP# 350669-1
S6C/P6
OPTO 5-8 = MOC3010
TR 5-8
S10
MATRIX P.C.
NOTE - THERE MAY BE A FUSE ON EACH TRIAC (5A)
PIN 5 SPECIAL GROUND PIN
R27 1K
R25 2K2
R26
Q11
R28
Q12
SPOT CENTER OFF
LED5
R52 470
P4 = AMP# 640454-4
54A, 54B = AMP# 640441-2
P4/S4B
P4/S4A
+9V
.2A S.B
15A F.B
T1 117V:6.3V@.6A
S2 POWER
D14 5.1V 1W ZENER
C2 470μ 6V
R5 .27Ω 1W
C1
P9 HUBBEL PLUG
Oct. 13/80 FROM FIRST DRAFT JUNE 30/80
SOCKET ON P.C. BOARD
C1 = 1000μ 10V
D10-13 = 1N4001
Oct 13/80
REV. MAR 14/82

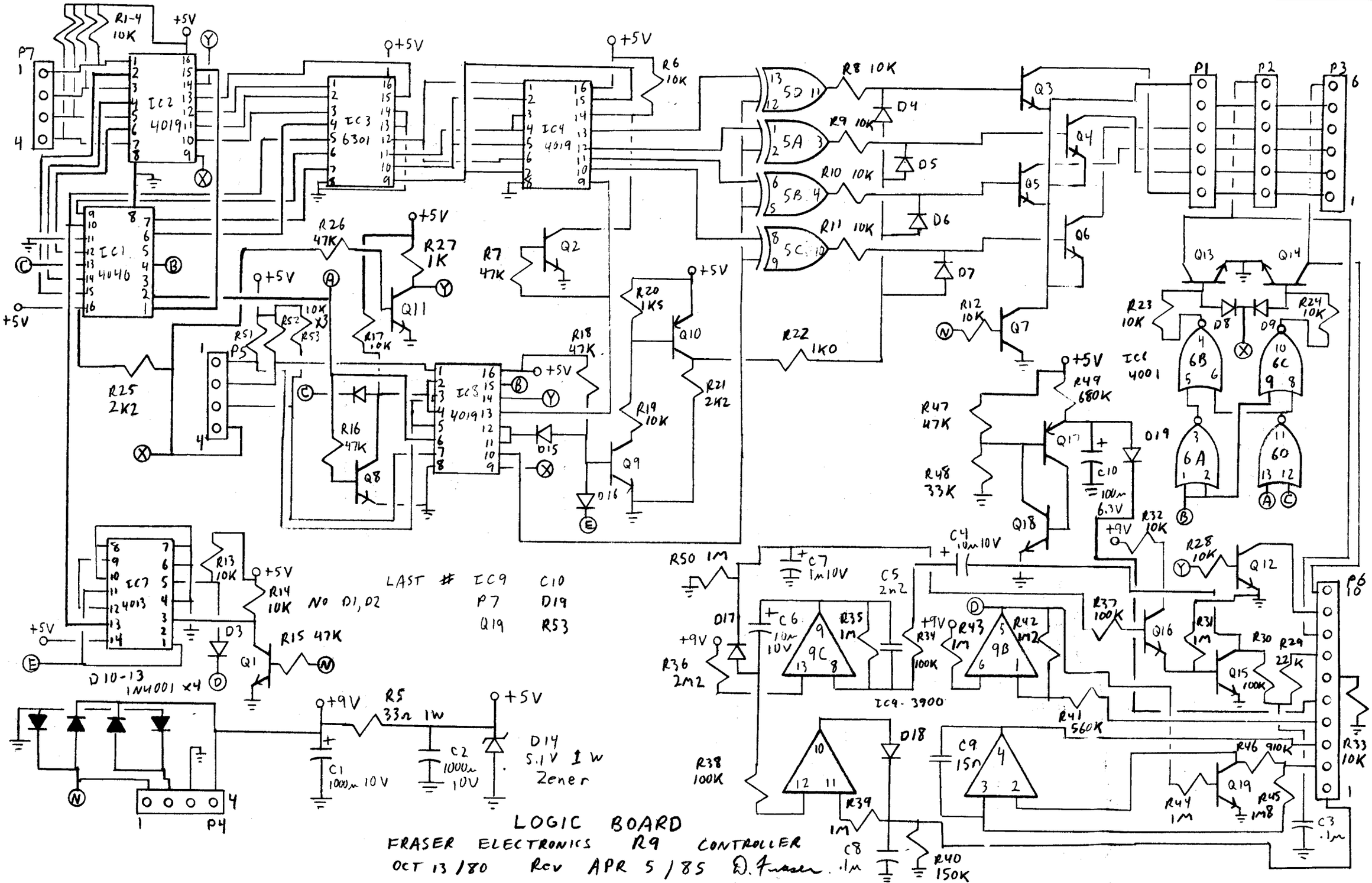
R1-4 10K
+5V
P7
IC2 4019
IC3 6301
IC4 4019
R6 10K
5D
5A
5B
5C
R8 10K
R9 10K
R10 10K
R11 10K
D4
D5
D6
D7
Q3
Q4
Q5
Q6
P1
P2
P3
IC1 4040
R26 47K
R27 1K
Q11
R7 47K
Q2
R20 1K5
Q10
R21 2K2
R22 1K0
R12 10K
Q7
Q13
Q14
R23 10K
R24 10K
D8
D9
IC6 4001
6B
6C
6A
6D
R25 2K2
P5
R51
R52 10K X3
R53
R17 10K
R18 47K
IC8 4019
R16 47K
Q8
R19 10K
Q9
D15
D16
R47 47K
R48 33K
R49 680K
Q17
D19
C10 100µ 6.3V
Q18
R32 10K
R28 10K
Q12
IC7 4013
R13 10K
R14 10K
R15 47K
Q1
D3
D10-13 1N4001 x4
LAST # IC9 C10
NO D1, D2 P7 D19
Q19 R53
R50 1M
C7 1m10V
C4 10m10V
C5 2n2
D17
C6 10m 10V
R35 1M
R36 2M2
R34 100K
R43 1M
R42 1M2
R37 100K
Q16
R31 1M
R30
R29 22K
Q15 100K
IC9 - 3900
R41 560K
R38 100K
D18
C9 15n
R46 910K
Q19
R44 1M
R45 1M8
R39 1M
C8 .1µ
R40 150K
C3 .1µ
P6
R33 10K
R5 33Ω 1W
C1 1000µ 10V
C2 1000µ 10V
D14 5.1V 1W Zener
P4
LOGIC BOARD
FRASER ELECTRONICS R9 CONTROLLER
OCT 13/80 Rev APR 5/85 D. Fraser

R9 LOGIC BOARD PARTS LAYOUT

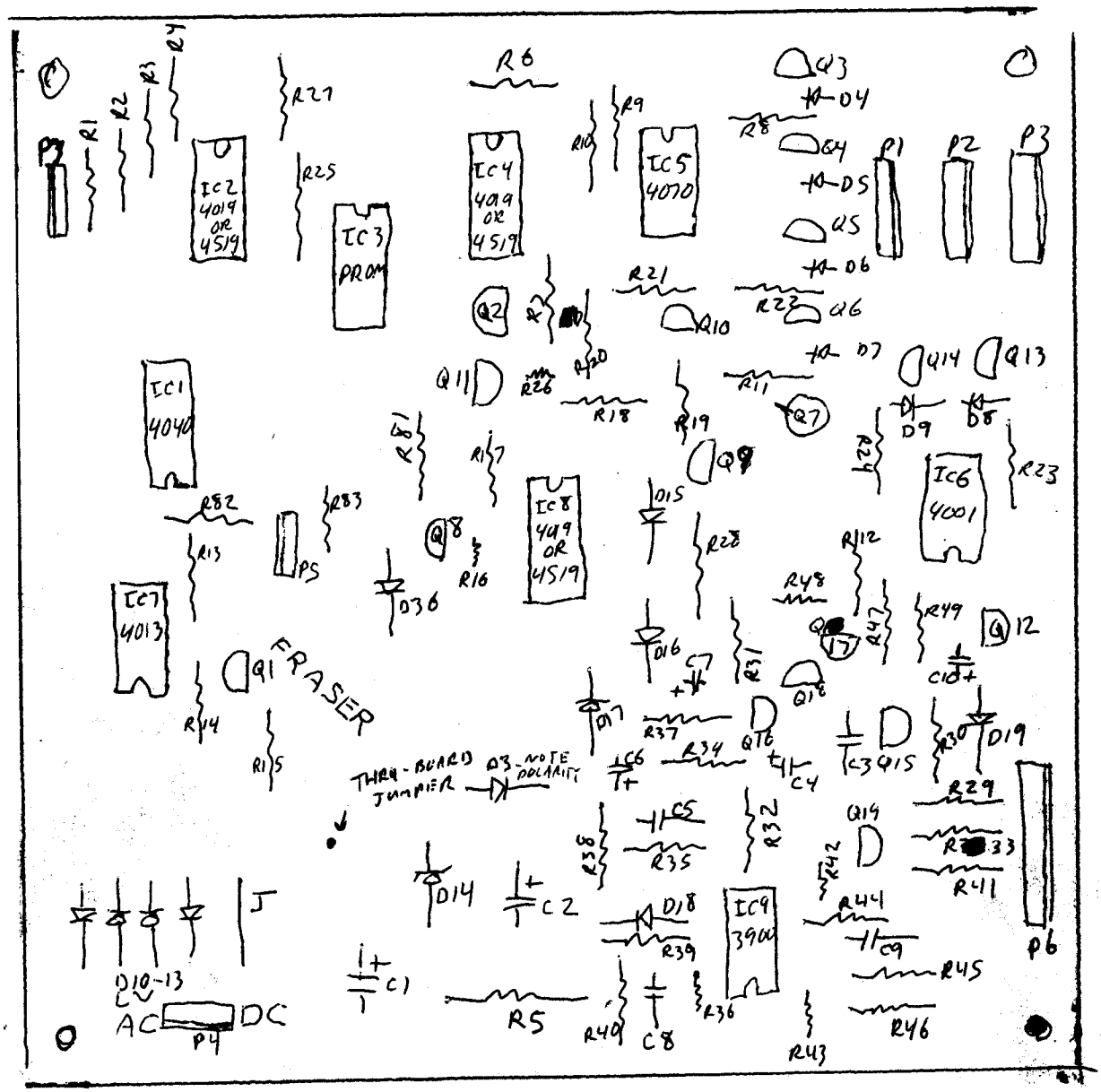

LED BOARDS

R53-56
R52
LED 1-5

PWR BDS.

R57-80
C11-18
D20-35

2/23/82

R9 Function Listing

D1 No longer needed-replaced by a jumper.

D2 Omitted

D3 Level shifting diode. Converts 7V P-P signal at IC9 Pin 5 to 5V P-P signal for IC7 Pin 5.

D4 to 7 These are the shimmer diodes, gating Q3-6 on when Q10 turns on.

D8-9 These disable Q13 and 14 during manual mode with auto progression off.

D10-13-These are the supply rectifiers.

D14 Zener diode-supply reference.

D15-16 These are an AND gate, and control Q9 in the shimmer function.

D17 Peak detector for the AGC transistors.

D18 Peak detector for the Audio circuit.

D19 Level shifter for the ramp generator.

D20-35 These are the matrix control gating diodes.

D36 Control diode for the no shimmer without invert during auto progression interlock.

R5 Dropping resistor for D14-Must be .5Watt metal film or 1 Watt carbon type.

R20 Was 1.5K now 3.0K

R38 Reduce if IC9D gain is too low.

R39 Decrease if IC9D gain is too high.

R49 Was 1M Now 560K

R50 Jumper out during Auto Progression testing if desired

R52-64 470Ohm-OK to use 510 ohm.

R65-68 & R73-76-Was 180 ohm .5Watt. Now 820 to 1K2 .5Watt.

C2 May be reduced to 470mFd at 6Volts

R9 Function Listing.

IC1. This chip is the main control counter for the unit. It runs the patterns and controls the pattern selector and modifiers during auto progression.

IC2 This chip selects the pattern control source, either from the thumbwheel switch of from IC 1.

IC3 This is the memory chip with the 16 patterns stored inside of it.

IC4 This chip does the reverse direction function.

IC5 This chip is the Invert function.

IC6 Controls the matrix direction during Auto Progression.

IC7A This is the zero crossing control, allowing the clock to advance only on zero crossings of the AC line.

IC7B This is the first stage in the control chain, the rest of which is IC1

IC8 This selects the modifier control source, between the manual switches and Auto Progression.

IC9A This is the charge pump/ramp generator for the clock generator.

IC9B This is a schmitt trigger for the clock circuit, both in Audio and Auto/Slide modes.

IC9C This is the low pass audio filter and AGC.

IC9D This is the peak detector for the audio circuit.

Q1 This is the zero crossing detector for IC7A

Q2' This is the control inverter for IC4.

Q3,4,5 & 6 These are the LED/Opto drivers-The main logic board outputs.

Q7 This controls the Bright/Dim function. In Dim mode, it removes the ground path for Q3 to 7 every half cycle of the AC line.

Q8 This is the interlock that prevents shimmer from happening unless invert is also present during auto progression.

Q9 & 10 These control the shimmer action.

Q11 This is the inverter that controls ICs 2 & 8 to switch between manual and autoprogression modes.

Q12 This enables the matrix switch when in the manual mode.

Q13 and 14 These switch between the matrix modes during auto progression.

Q15 & 16 These are the AGC device for audio triggering.

Q17 & 18 These are simulating a programmable unijunction transistor in order to generate the ramp waveform in the slide mode.

Q19 This reverses the charge pump, IC9A in order to generate the triangle wave required for the clock to operate.

R9 Checkout Procedure for New Units--D.Fraser Mar. 14/82

1. Place a piece of carpet or a towell on the bench to avoid scratching the unit under test.

2. Place the controller in front of you, setting the controls as follows: Trigger Source to Auto, Matrix Switch to right side, Auto Progression Switch to off, Auto Rate control to middle, Bright/Dim Switch to bright, Load On/Off switch to off, Invert, Shimmer and Reverse Switches to off, Power Switch to off. The pattern selector thunbwheel may be in any position. Disconnect the jumpers from the logic board to the power boards.

3. Set Simpson 260 to R X 1 and polarity switch to +D.C.

4. Connect Black lead to a convenient ground point such as the anode of the zener diode.

5. Measure the resistance to ground at each end of the 27 or 33 ohm dropping resistor, R5. The reading should exceed 200 ohms at either end. If below this, investigate for solder bridges, etc.

6. Preset the isolated AC supply to 120Volts and set the current range to 3 Amps. Plug the R9 into the supply.

7. Connect the scope ground lead to a convenient ground point on the logic board, and connect the hot lead to the cathode of the zener diode. The scope should be set for 2V/Cm vertical. Sweep speed is not important.

8. Switch the R9 on. There should be a reading of 5.1Volts ±10% on the scope. If not, clear the power supply fault before proceeding.

9. The pilot lamp should be lit now. If not, the usual cause is that it has been wired backwards, or is not receiving power at all.

10. The indicators should be moving. If not check IC9 Pin 5. This is the 3900 and is the output of the clock generator. There should be a square wave here with ripple on the top. The duty cycle will probably not be 50%, but anything from a 30% to 70% duty cycle is OK. The amplitude will be about 7V P-P. Rotate the speed control to both ends to ensure that the speed does indeed vary end to end. If no square wave is present, the clock generator is faulty. If the square wave is present, check in this order until the fault is found: IC7 Pin 1 for 5V P-P square wave, IC7 Pin 3 for 60Hz square wave, IC1 Pins 10,9,7,6, IC3 Pins 9,10,11,12, IC 4 Pins 10,11,12,13, IC 5 Pins 3,4,10,11, and the Collectors of Q3,4,5,&6. 90% of the faults here are either solder bridges or improper parts placement.

11. With all 4 indicators now flashing, find the straight 1-2-3-4 pattern, which is usually "F" on the thumbwheel switch.

12.Check invert operation. IC5 controls this.The invert switch goes through IC 8 Pin 7 to pin 10 on to IC5 Pins 2,5,9 & 12.

13. Check reverse switch. This is done by IC4. The switch signal goes to IC8 Pin 1 to pin 13 and on to IC4 pins 9 & 11. Q2 acts as in inverter.

14. Check shimmer. On shimmer, all of the lights flash on for about 50% of a clock cycle on each clock cycle. This is produced by D4,5,6 &7. It is controlled through IC8 Pins 31&15 to Pins 11 & 12 on to D15, D16, Q9 and Q10.

15. Switch the invert on and set the trigger selector to audio.

16. Switch the Brt/Dim Switch to Dim. If the lights do not dim, check for a 60Hz square wave on the collector of Q7. This test need only be done if the Brt/Dim switch fails to work. There should be zero volts on the collector of Q7 when in the bright mode.

17. Set invert, shimmer and reverse switches to off and turn the trigger selector to slide. If slide action appears normal for one complete cycle, go to the next step. If not the scope should be connected to the emitter of Q17 to check for a slow positive going ramp waveform. This test must be done with a times 10 probe as the normal input impedance of the scope will upset the circuit and prevent it from functioning properly.

18.Return the trigger selector to Auto.

19.Go through the 16 positions on the thumbwheel switch and make sure no two are the same. If you get several patterns repeatin themselves through the 16 positions, the usual cause is a solder bridge on IC2 pins 1,3,5,7, 10,11,12 or 13 Or on IC3 pins 1,2,3 Or 15 or on P3 pins 1,2,3 or 4.

20. Switch to auto progression. Place the probe from the scope to IC1 Pin 1 and note if it is high or low. Turn the rate control to max. and check to see that this pin eventually changes state. Jumpering R50 with a clip lead will speed up this process by 50%. When IC1 Pin 1 changes state, you will then know that all 16 patterns will be properly produced by IC3. While waiting for IC1 Pin1 to change state check that the invert, shimmer & reverse are functioning also. Note that while in the auto prograssion mode, shimmer should never come on at the same time that there is no invert. Inver must be on, for shimmer to come on. Q8 is present to act as an interlock to ensure this. Auto progression switching is done by IC's 2&8, with Q11 controlling the two ICs.

21.Connect a ¼" to ¼" cord from a speaker out test jack on the test panel to the audio input on the R9. Connect the wattmeter to the RCA jack above the ¼" jack on the panel. Select an FM rock station and set the Bass control to the flat position.

22. Connect the scope to R41, a 560K resistor, where it connects to the 10 Pin amp connector Pin 4.

23.Turn rate control to maximum and note the waveform on the scope. Set the position control so that the 4V P-P(approx) line up as well as possible with graduations on the scope. These are the upper and lower trip points of the schmitt trigger IC9B and will help to determine if the audio trigger is working OK.

24.Switch the tr-gger selector to audio.

25.Turn up the audio until the indicators start to move. This should require less than .1 Watt.

26.Turn the balance control on the amp so that the sound almost disappears This is to prevent step 27 from being too loud.

27.turn up the level on the amp so that 50 Watts is shown on the meter, and check that there is good synchronization with the music.

28.if the case trigger needed over .1 Watt to work, IC9D has insufficient gain, and R38 should be shunted with another resistor until the trigger sensitivity is below .1 Watts.

29. If chase action is good at low level, but not at high level, refer to the waveform on the scope. If the pattern seldom approaches the upper trip point, IC9D has insufficient gain. See step 28 for the cure, If the waveform goes high OK, but seldom approaches the lower trip point, IC9D has too much gain and R39 will have to be shunted to reduce the gain. This assumes that the audio trigger circuitry has already been made functional.

30. Vary the input level fron .1 to 50 Watts and make sure the R9 will trigger all through this range. If not, the AGC, IC9C may be at fault.

31. Turn down the amp to prevent blasting, and disconnect the -udio cable.

32.Switch the trigger selector to Auto.

33. Switch off the AC supply or unplug the R9. If not done already, take an awl and slightly expand the pins in the rear panel connector.

34. Plug in the test display and recónnect the jumpers to the power boards

35. Reconnect the AC power to the R9.

36. Check the pattern indicators for proper operation. Solder bridges on the power boards can sometimes cause two lights to come on at the same time that are not supposed to.

37.Put Brt/Dim Switch to Bright and switch the Load Switch to on.

38. Check for proper operation in all 3 matrix positions. If any channel is dead, the fault is usually either poor contact in the output connector, or a solder bridge from pins 1 and 2 on an opto coupler, while a lamp staying lit dimly when it is not supposed to, is either a leaky triac or

a solder bridge from pin 5 to either pin 4 or 6 on an opto coupler.

39. Check Dim action with load.

40. Switch to auto progeession and ensure that the R9 operates in all 3 matrix directions. If it will not, check in the vicinity of IC6.

41. Screw down the logic board.

42. Record the serial number, AEPB number, date completed and any modifications out of the ordinary in the record book.

43. Screw on the lid. If the unit is going out of town, a photocopy of the schematic should be tucked in under the logic board before putting the lid on.

44.Clean off the excess heatsink grease and fingerprints.

45. Make out the job invoice to the sales dept.

46. Deliver to sales dept, or pack as required.

Finis

R9 PROGRAMMED LIGHTING CONTROLLER User's Guide

The R9 lighting controller has two operating modes, MANUAL and AUTO PROGRESSION. In the manual mode, all functions are selected manually. In auto progression, the matrix, invert, shimmer, reverse and thumbwheel effect selector switches are taken over by the internal logic and will change patterns automatically. This mode is for when the operator is too busy to pay attention to the lights, yet does not want the lights do be doing the same thing all the time.

In practice, we have found that the operator will normally leave the unit in the auto progression mode and only select functions manually when they wish to use a specific pattern with a specific song.

THE CONTROLS:

Audio/Auto/Slide Rotary Selector Switch - This switch selects the source of the trigger pulses that actually sequence the lights. In the audio position, it uses the bass line in the music to trigger the lights. In the auto position, the speed of the lights is set by the RATE or SPEED control to the right. The slide position uses a "ramp" generator to control the speed. The speed of the chase starts very slow and gradually builds up until they are flashing at high speed. Then, once a certain speed is reached, the lights stop chasing and the sequence starts again. This function is useful when the controller is used during the day in a club environment where the operator wants the lights to do something yet there will be no music playing and a steady speed chase is too boring.

Matrix Switch - This switch is the sideways one to the right and slightly above the Audio/Auto/Slide switch. On many units this switch is unlabelled. In the manual mode, this switch controls the direction of the chase with a matrixed lamp display. In auto progression, this function is taken over by the internal logic.

Auto Progression Switch - When engaged, the matrix, pattern selector, invert, shimmer & reverse functions are taken over by the internal logic.

Rate or Speed Control - Sets the chase speed when the Auto mode is selected by the Audio/Auto/Slide Selector Switch.

Bright/Dim Switch - This switch dims the lamps 50%. Please note that this switchapplies DC to the lamps and if used with transformer operated lamps or neon, it must be jumpered out to defeat its function. Failure to do this will result in destruction of the transformers in the lights. With regular incandescent lamps, tfunction is perfectly safe and no problems will result.

Pattern Selector Switch - This is the unlabelled thumbwheel switch in the middle. It has 16 positions, to select the 16 basic patterns. This switch has its function taken over by the internal logic when the auto progression mode is selected.

Load On/Off Switch - This switch turns the lamps on or off, while still allowing the controller to operate. This may be used by the operator to select the pattern he wants with the lamps off and them switch the lamps on only when appropriate. This switch could also be called a "preview" switch.

Invert Switch - This switch inverts the pattern. That is, for example, instead of one light on, with 3 dark, you can get one off with three on. Some people call this a "Light Chase/Dark Chase" switch.

Shimmer Switch - This switch flashes all the lights on during the first half of each chase step. It looks best if used with the invert function. In the auto progression mode, this function only comes on if

the pattern is inverted.

Reverse Switch - This reverses the direction of the chase pattern. As stated earlier, the invert, shimmer and reverse functions are controlled by the internal logic during the auto progression mode. For these switches to have any effect on the lamps, the controller must be in the manual mode.

Power Switch - This switch controls the main AC power to the unit. Please note that when the AC power is turned off, the logic for the auto progression is reset, starting the auto progression program over once the power is switched back on.

Rear Panel

AC Cord - Do NOT defeat the third prong on the AC cord. It is there for your safety. If the cord is damaged in any way, it must be replaced by a qualified technician.

Fuse Holder - Replace the fuse only with the type indicated on the rear panel.

Audio Input Jack - This is the 1/4" mono phone jack. Please note that the ground side of the jack is completely isolated from the chassis. The input impedance is 22K ohms and the input signal may be anything from .5 Volts to 50 Volts RMS. This means that you could use am amplifier up to 1000 Watts without any worry about damaging the audio input circuit. The audio input has automatic gain control for operator ease.

Output Connector - This is usually a 10 pin Cinch Jones socket. The male connector to use with it is Cinch Jones part # P310CCT. It is available through most electronics part suppliers. The pins 1,3,5 & 7 are the "X" Axis outputs in a matrixed display, while the pins 2,4,6 & 8 are the "Y" Axis outputs. Pins 9 & 10 are ground pins, wired to the case of the unit and to the third wire ground of the AC cord. This pin out is slightly different in 24 Volt units used for low voltage loads. Please consult the wiring diagram enclosed with those units.

Spare Parts

Spare parts may be ordered from:
FRASER ELECTRONICS
P.O.Box 4265
Vancouver, B.C. V6B 3Z7

or from the dealer where you purchased the unit. Thank you for purchasing the R9 Programmed Lighting Controller. If you have any questions about it or any other lighting control application you may have please feel free to send us a letter of to consult with your dealer.

A Note for the Professional Technician Installing this unit.

When installing these units care should be taken to allow unrestricted air flow around the cabinet if the loading exceeds 2500Watts total. If it is inst-lled in an enclosed xabinet, a fan should be provided to allow sufficient cooling.

When inserting the AMP pins into the connector they should be inserted as far as they can go until they click into place. After the socket pins are in place, the pin should be flared slightly with the prong on a pair of needle nose pliers or with a small punch. If this is not done the connector will be extremely difficult to fit into place. Also, If more than 5 Amps will be flowing through any pin, the connection should be soldered as well as crimped or the connector will run warm.

Note that any short circuit in the load will instantly blow a triac if power is connected and shorted triacs are not covered under the warranty except when the lights are also purchased and installed by the dealer selling the controller.

While the power switch is a UL and CSA approved 20Amp per side type, its life can be extended indefinitely if the lamps are switched off by the "LIGHTS ON" switch before the power is switched off. Conversely, when switching on, switch life will be imporoved if the lamp load is turned off with the lights on switch before switching on. After the power switch is turned on and the controller is running, the load can be engaged with the lights on switch. The lights on switch operates at logic level and may be used as often as necessary with no detrement to anything.

The Bright/Dim switch comes jumpered out on all US models, and this jumper must be removed if you want the dim function to work. The reason that this is done, is because if the dim is engaged with transformer operated loads such as "RAIN LIGHTS" or NEON, the transformers in them will be destroyed and the controller may be damaged. The reason for this is that on dim, DC is applied to the load which cannot be used by tranforrmers. Thr jumper prevents accidental damage from the use of this switch. If ordinary incandescent lamps are used, however, it is perfectly safe to use the dim function as long as none of the lamps are transformer operated.

To ease in service, the schematic diagram is tucked in under the main printed circuit board.

The input connections for the power are industry standard color code. The BLACK and RED are the HOT lines and should be 110Volts above the Neutral which is WHITE. The voltage between the Red and Black may be 180' out of phase giving a reading of as high as 240V. The GREEN of course is your chassis ground. Under no circumstances should the unit be connected to two legs of a three phase system. If this is done, it will still function, but the zero crossing timing will be at the wrong time for two channels, and there will be a large amount of electrical noise induced into the sound system. If the input power is three phase, both the red and black must be on the same leg.

If there are any further question, I may be contacted through the dealer where this unit was purchased.

Daniel Fraser

Daniel Fraser

Aug. 18/1980

Memory Interchangeability.

	74S387 1.79	74S287 1.79	54S387	54S287
AMD.	27S10C PC	27S11C PC	27S10M PC	27S11M PC.
FSC	93416C PC 93417PC - 1.95.	93426M - PC 93427PC. 1.95.	93417M - PC	93426M (?). - P.C.
HARRIS	HM17610-5	HM17611-5	HM17610-2.	HM17611-2
HARRIS	HPROM1024A-5	HPROM1024-5.	HPROM1024A-2.	HPROM1024-2
INTEL.	P3601		Q3601	
INTERSIL. CPE SUFFIX	IM5603AC.	IM5623C	IM5603AM.	IM5623M
MMI	PREFIX ~~S~~ H63 ~~X~~ 6201N	H6201N	5201N	H5201N
MMI	6300N (6300J-1) 1.95	6301N (6301J-1) 1.95	5300N	5301N
NSC.	DM8573N	DM8574N	DM7573N	DM7574N
SIG	N82S126B	N82S129B	S82S126B	S82S129B
SIG		N82S229B.		S82S229B.

PROM Selection Guide

RAE
451 6001

THERE ARE NO "0" OR F" ENTRIES

R9 PROM PROGRAM

WORD NO.	OUTPUTS 04	03	02	01	REMARKS
0.	0	1	1	1	7
1	1	0	1	1	B
2	1	1	0	1	D
3	1	1	1	0	E
4	0	1	1	1	7
5	1	0	1	1	B
6	1	1	0	1	D
7	1	1	1	0	E
8	0	1	1	1	7
9	1	0	1	1	B
10	1	1	0	1	D
11	1	1	1	0	E
12	0	1	1	1	7
13	1	0	1	1	B
14	1	1	0	1	D
15	1	1	1	0	E
16	0	0	1	1	3
17	1	0	0	1	9
18	1	1	0	0	C
19	0	1	1	0	6
20	0	0	1	1	3
21	1	0	0	1	9
22	1	1	0	0	C
23	0	1	1	0	6
24	0	0	1	1	3
25	1	0	0	1	9
26	1	1	0	0	C
27	0	1	1	0	6
28	0	0	1	1	3
29	1	0	0	1	9
30	1	1	0	0	C
31	0	1	1	0	6
32	0	0	1	1	3
33	0	1	1	0	6
34	1	0	0	1	9
35	1	1	0	0	C
36	1	1	1	0	E
37	0	0	1	0	2
38	0	1	0	1	5
39	1	0	0	0	8
40	1	0	1	1	B
41	1	1	1	0	E
42	0	0	0	1	1
43	0	1	0	0	4
44	0	1	1	1	7
45	1	0	1	0	A
46	1	1	0	1	D
47	0	0	0	1	1
48	0	1	1	1	7
49	1	0	1	1	B
50	1	1	0	1	D
51	[illegible]	[illegible]	[illegible]	0	E
52	[illegible]	[illegible]	[illegible]	0	E
53	1	1	0	1	D
54	1	0	1	1	B
55	0	1	1	1	7
56	0	1	1	1	7
57	1	0	1	1	B
58	1	1	0	1	D
59	[illegible]	[illegible]	[illegible]	0	E
60	[illegible]	[illegible]	[illegible]	0	E
61	[illegible]	[illegible]	[illegible]	1	D
62	1	0	[illegible]	[illegible]	[illegible]

WORD NO.	OUTPUTS 04	03	02	01	REMARKS
64	0	0	1	1	3
65	0	0	1	1	3
66	1	1	0	0	C
67	1	1	0	0	C
68	0	0	1	1	3
69	0	0	1	1	3
70	1	1	0	0	C
71	1	1	0	0	C
72	0	0	1	1	3
73	1	1	0	0	C
74	0	0	1	1	3
75	1	1	0	0	C
76	0	0	1	1	3
77	1	1	0	0	C
78	0	0	1	1	3
79	1	1	0	0	C
80	0	1	1	1	7
81	1	0	[illegible]	[illegible]	B
82	0	1	1	1	7
83	1	0	[illegible]	[illegible]	B
84	1	1	0	1	D
85	1	0	1	1	B
86	0	1	1	1	7
87	1	0	1	1	B
88	1	1	0	1	D
89	1	1	1	0	E
90	1	1	0	1	D
91	1	0	1	1	B
92	0	1	1	1	7
93	1	0	1	1	B
94	1	1	0	1	D
95	1	0	1	1	B
96	0	0	1	1	3
97	1	0	0	1	9
98	1	1	0	0	C
99	0	1	1	0	6
100	0	0	1	1	3
101	1	0	0	1	9
102	1	1	0	0	C
103	0	1	1	0	6
104	0	0	1	1	3
105	1	0	0	1	9
106	1	1	0	0	C
107	0	1	1	0	6
108	0	1	1	0	6
109	1	1	0	0	C
110	1	0	0	1	9
111	0	0	1	1	3
112	0	1	1	1	7
113	1	0	1	1	B
114	1	1	0	1	B
115	1	1	1	0	E
116	0	1	1	1	7
117	1	0	1	1	B
118	1	1	0	1	D
119	1	1	1	0	E
120	0	1	1	1	7
121	1	0	1	1	B
122	1	1	0	1	D
123	1	1	1	0	E
124	1	1	0	1	D
125	1	0	1	1	B
126	1	1	1	0	E

WORD NO.	OUTPUTS 04	03	02	01	REMARKS
128	0	0	1	1	3
129	1	0	0	1	9
130	1	1	0	0	C
131	0	1	1	0	6
132	0	1	1	0	6
133	1	1	0	0	C
134	1	0	0	1	9
135	0	0	1	1	3
136	0	0	1	1	3
137	1	0	0	1	9
138	1	1	0	0	C
139	0	1	1	0	6
140	0	1	1	0	6
141	1	1	0	0	C
142	1	0	0	1	9
143	0	0	1	1	3
144	0	1	1	1	7
145	1	0	1	1	B
146	1	1	0	1	D
147	1	1	1	0	E
148	0	1	1	1	7
149	1	0	1	1	B
150	1	1	0	1	D
151	1	1	1	0	E
152	1	1	1	0	E
153	1	1	0	1	D
154	1	0	1	1	B
155	0	1	1	1	7
156	1	1	1	0	E
157	1	1	0	1	D D
158	1	0	1	1	B
159	0	1	1	1	7
160	0	1	0	1	5
161	1	0	1	0	A
162	0	1	0	1	5
163	1	0	1	0	A
164	0	1	0	1	5
165	1	0	1	0	A
166	0	1	0	1	5
167	1	0	1	0	A
168	0	1	0	1	5
169	0	1	0	1	5
170	1	0	1	0	A
171	1	0	1	0	A
172	0	1	0	1	5
173	0	1	0	1	5
174	1	0	1	0	A
175	1	0	1	0	A
176	0	1	1	1	7
177	1	0	1	1	B
178	1	1	0	1	D
179	1	1	1	0	E
180	1	1	0	1	D
181	1	0	1	1	B
182	0	1	1	1	7
183	1	0	1	1	B
184	1	1	0	1	D
185	1	1	1	0	E
186	1	1	0	1	D
187	1	0	1	1	B
188	0	1	1	1	7
189	1	0	1	1	B
190	1	1	0	1	D

WORD NO.	OUTPUTS 04	03	02	01	REMARKS
192	1	0	1	1	B
193	1	1	0	1	D
194	1	0	1	1	B
195	1	1	0	1	D
196	1	0	1	1	B
197	0	1	1	1	7
198	1	0	1	1	B
199	1	1	0	1	D
200	1	1	1	0	E
201	1	1	0	1	D
202	1	0	1	1	B
203	0	1	1	1	7
204	1	0	1	1	B
205	1	1	0	1	D
206	1	1	1	0	E
207	1	1	0	1	D
208	0	1	1	1	7
209	1	0	1	1	B
210	1	1	0	1	D
211	1	1	1	0	E
212	0	1	1	1	7
213	1	0	1	1	B
214	1	1	0	1	D
215	1	1	1	0	E
216	0	1	1	1	7
217	1	0	1	1	B
218	1	1	0	1	D
219	1	1	1	0	E
220	0	1	1	1	7
221	1	0	1	1	B
222	1	1	0	1	D
223	1	0	1	1	B
224	0	1	1	1	7
225	1	0	1	1	B
226	1	1	0	1	D
227	1	1	0	1	D
228	1	1	1	0	E
229	0	1	1	1	7
230	1	0	1	1	B
231	1	0	1	1	B
232	1	1	0	1	D
233	1	1	1	0	E
234	0	1	1	1	7
235	0	1	1	1	7
236	1	0	1	1	B
237	1	1	0	1	D
238	1	1	1	0	E
239	1	1	1	0	E
240	0	0	1	1	3
241	1	0	0	1	9
242	1	1	0	0	C
243	0	1	1	0	6
244	1	1	0	0	C
245	1	0	0	1	9
246	0	0	1	1	3
247	1	0	0	1	9
248	1	1	0	0	C
249	0	1	1	0	6
250	1	0	0	0	C
251	1	0	0	1	9
252	0	0	1	1	3
253	1	0	0	1	9
254	[illegible]	[illegible]	[illegible]	[illegible]	[illegible]

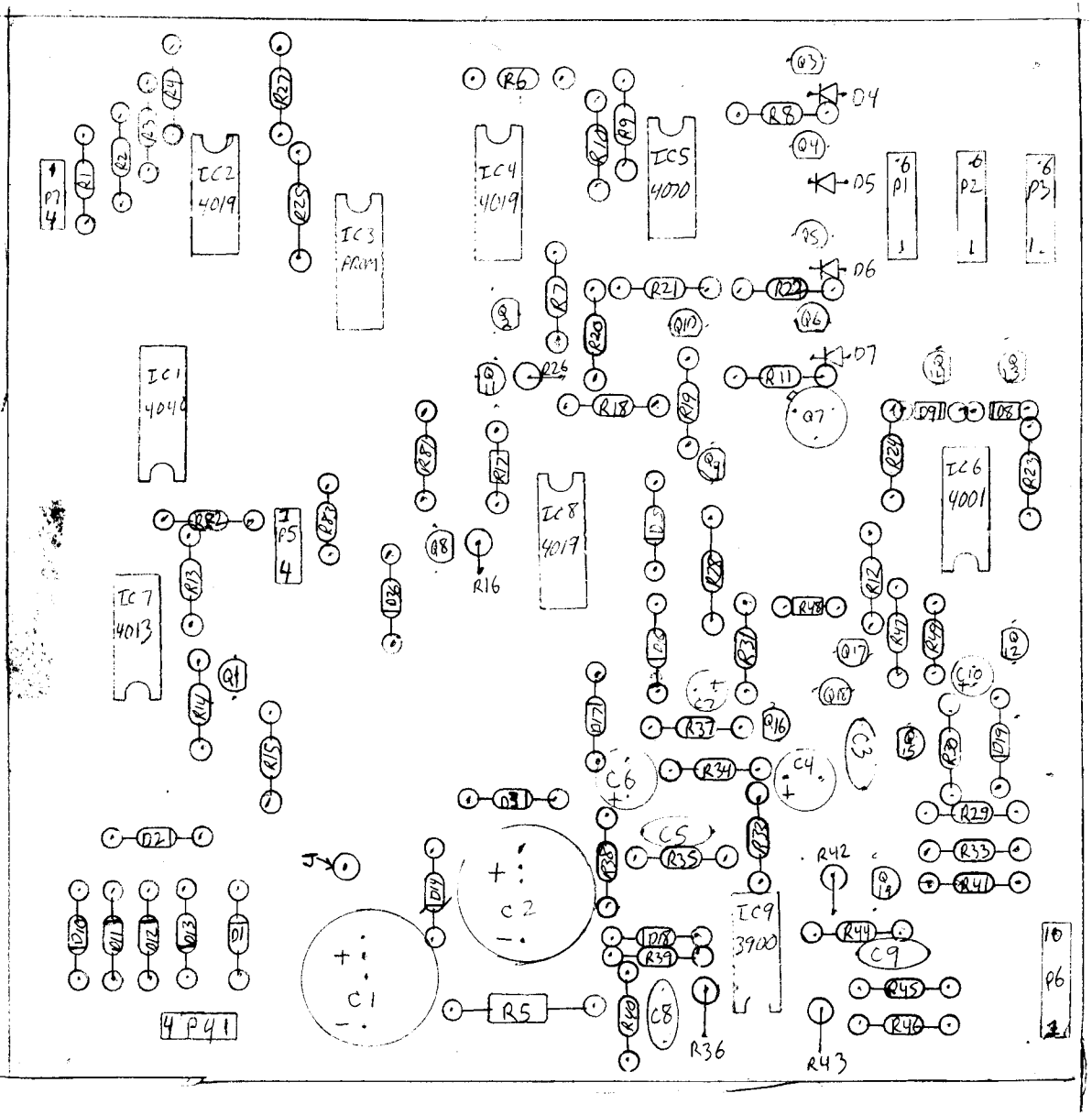
IC2
4019
IC3
PROM
IC4
4019
IC5
4070
P1
P2
P3
IC1
4040
IC8
4019
IC6
4001
IC7
4013
P5
P6
IC9
3900
C1
C2
C3
C4
C5
C6
C8
C9
C10
R5
R16
R36
R42
R43
D4
D5
D6
D7
D1
D2
D3
4P41

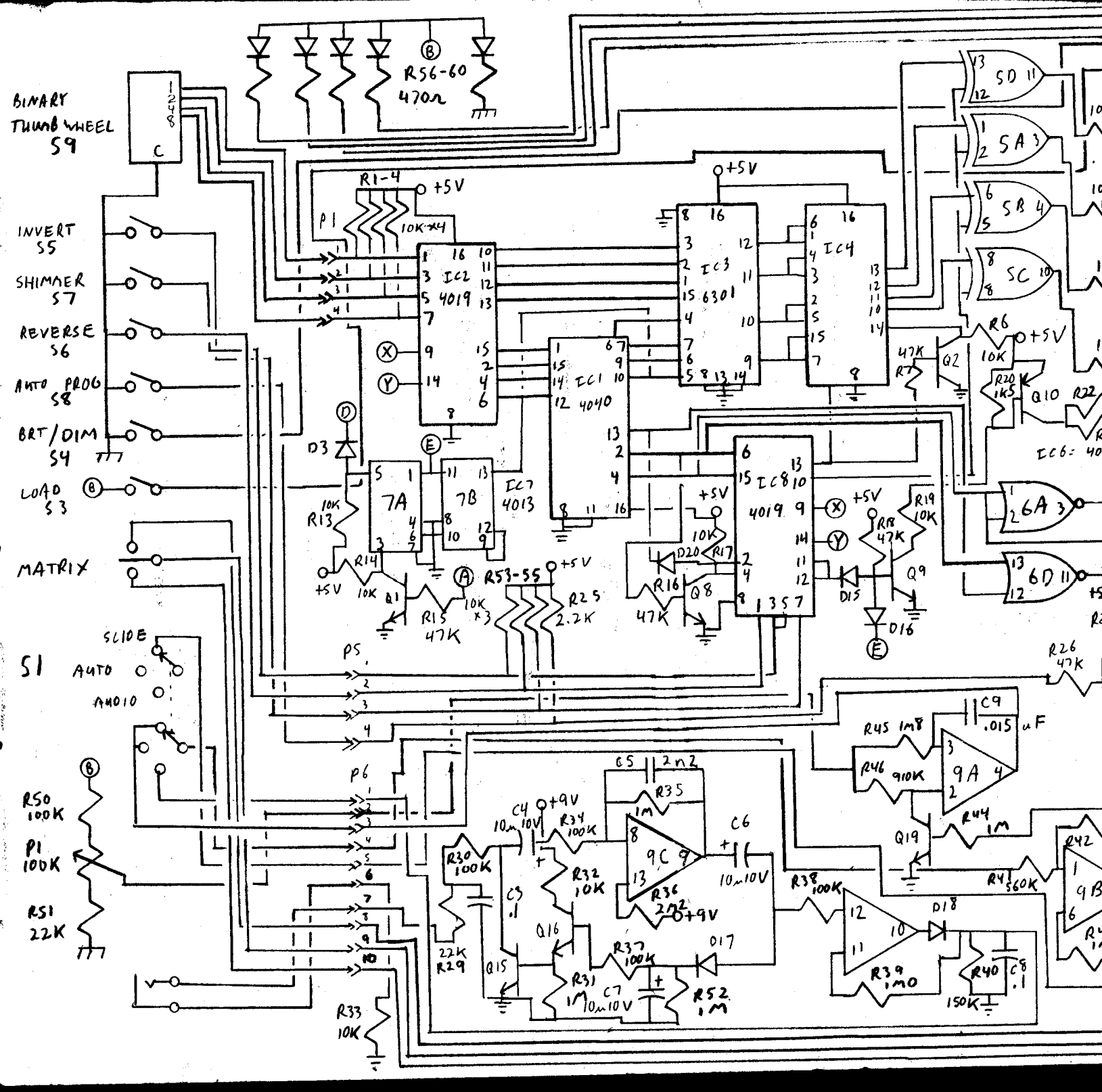
BINARY THUMB WHEEL S9
INVERT S5
SHIMMER S7
REVERSE S6
AUTO PROG S8
BRT/DIM S4
LOAD S3
MATRIX
S1
SLIDE
AUTO
AUDIO
R56-60 470Ω
R1-4
10K x4
+5V
IC2 4019
IC3 6301
IC4
IC1 4040
IC7 4013
IC8 4019
7A
7B
5D
5A
5B
5C
6A
6D
9A
9B
9C
R13 10K
R14 10K
R15 47K
R16 47K
R17 10K
R18 47K
R19 10K
R20 1K5
R22
R25 2.2K
R26 47K
R53-55
10K x3
R6 10K
R7 47K
Q1
Q2
Q8
Q9
Q10
Q15
Q16
Q19
D3
D15
D16
D17
D18
D20
P1 100K
R50 100K
R51 22K
R33 10K
P5
P6
C4 10u 10V
C5 2n2
C6 10u 10V
C7 10u 10V
C8 .1
C9 .015 uF
R30 100K
R29 22K
R31 1M
R32 10K
R34 100K
R35 1M
R36 2M2
R37 100K
R38 100K
R39 1M0
R40 150K
R41 560K
R44 1M
R45 1M8
R46 910K
R52 1M
+9V

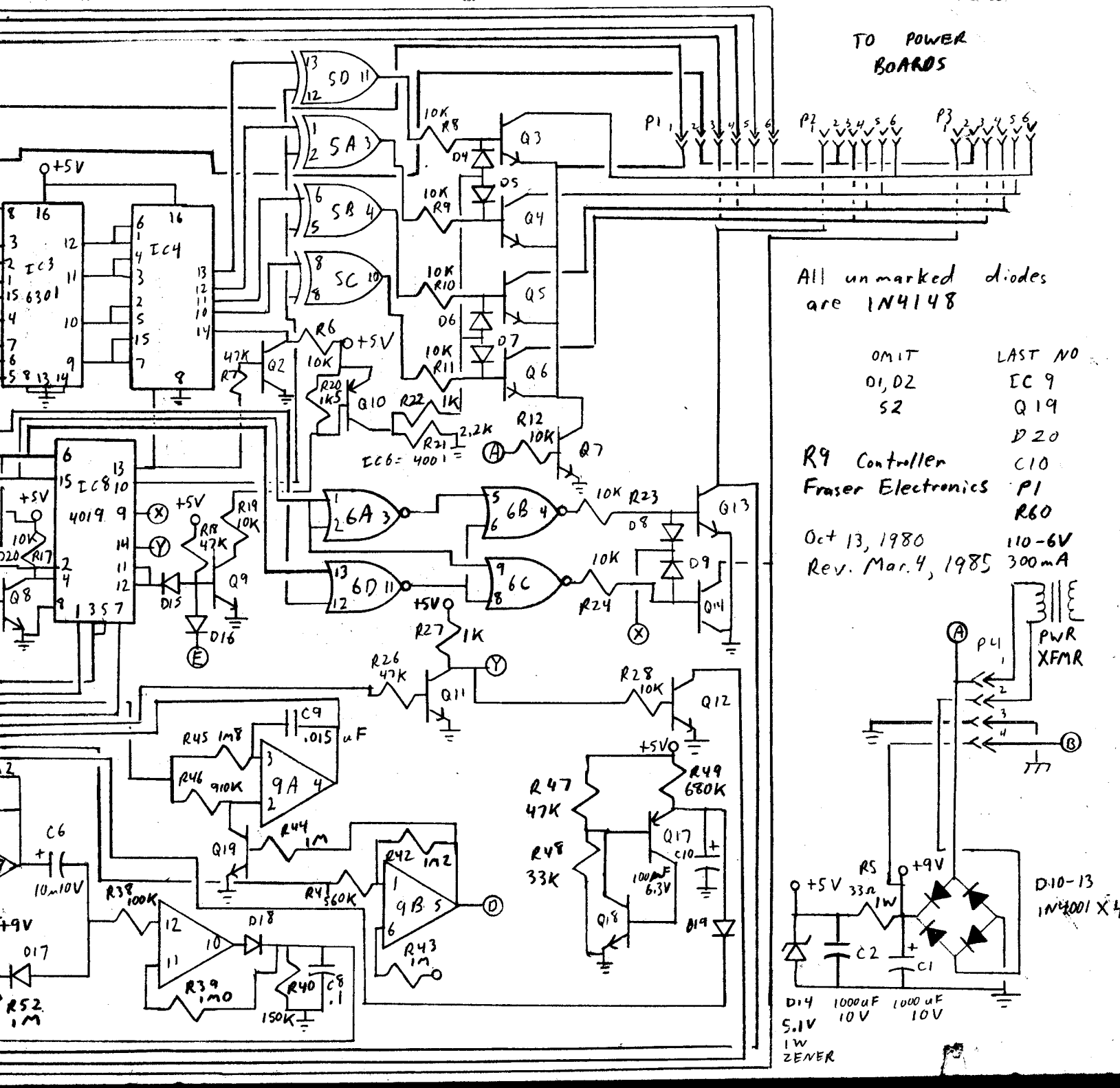
TO POWER BOARDS
P1
P2
P3
5D 11
5A 3
5B 4
5C 10
10K R8
10K R9
10K R10
10K R11
Q3
Q4
Q5
Q6
D4
D5
D6
D7
IC3 6301
IC4
+5V
R6 10K
47K R7
Q2
R20 1K5
Q10
R22 1K
R21 2.2K
IC6 = 4001
R12 10K
Q7
IC8 4019
R17 10K
Q8
R18 47K
R19 10K
Q9
D15
D16
6A 3
6B 4
6D 11
6C
10K R23
D8
Q13
10K
D9
R24
Q14
R27 1K
R26 47K
Q11
R28 10K
Q12
C9 .015 uF
R45 1M8
R46 910K
9A 4
Q19
R44 1M
R42 1M2
R41 560K
9B 5
R43 1M
R47 47K
R48 33K
R49 680K
Q17
C10 100uF 6.3V
Q18
D19
C6 10uF 10V
R38 100K
D18
R39 1M0
R40 150K
C8 .1
D17
R52 1M
All unmarked diodes are 1N4148
OMIT
D1, D2
S2
LAST NO
IC 9
Q 19
D 20
C10
P1
R60
R9 Controller
Fraser Electronics
Oct 13, 1980
Rev. Mar. 4, 1985
110-6V
300mA
P4
PWR XFMR
R5 33Ω 1W
+9V
+5V
C2
C1
D10-13
1N4001 X4
D14
5.1V
1W
ZENER
1000uF 10V
1000uF 10V

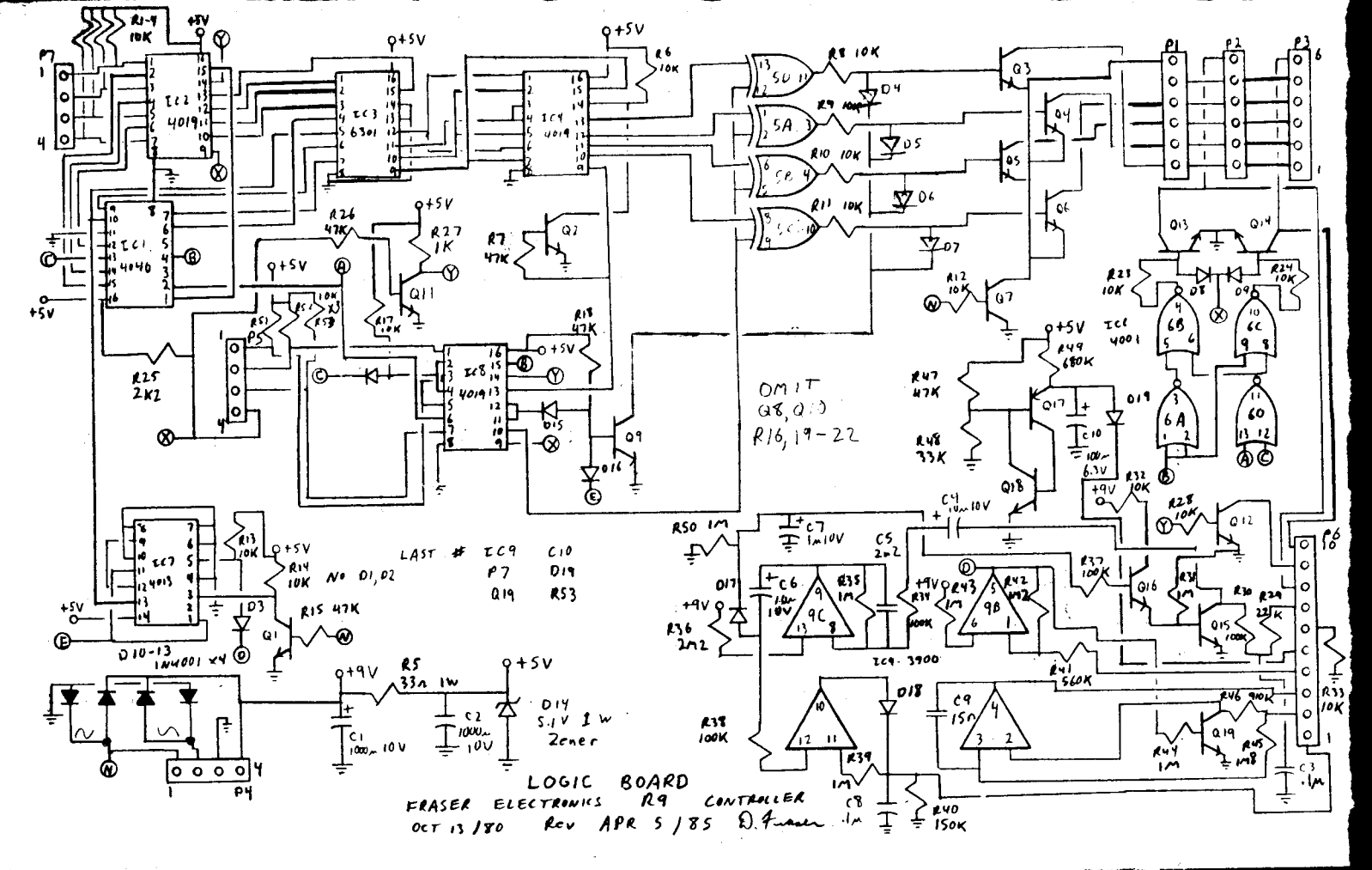
LOGIC BOARD
FRASER ELECTRONICS R9 CONTROLLER
OCT 13/80 REV APR 5/85 D. Fraser
OMIT Q8, Q10 R16, 19-22
LAST # IC9 C10 P7 D19 Q19 R53
NO D1, D2
D10-13 1N4001 x4
D14 5.1V 1W Zener
IC9 3900
IC1 4040
IC2 4019
IC3 6301
IC4 4019
IC7 4013
IC8 4019
IC11 4001
P1
P2
P3
P4
P6
P7

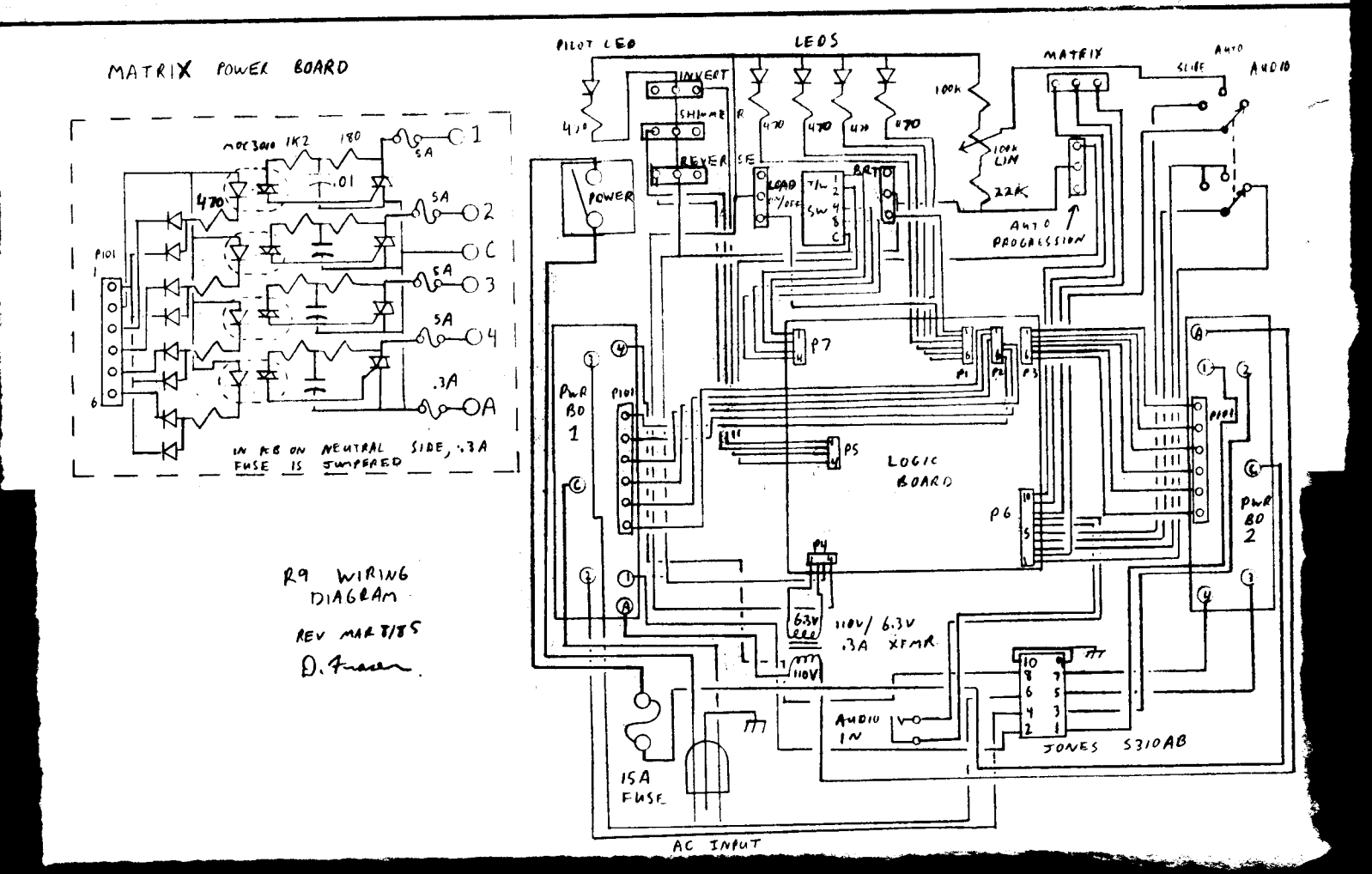
MATRIX POWER BOARD
MOC3010
IN PCB ON NEUTRAL SIDE, .3A FUSE IS JUMPERED
PILOT LED
LEDS
INVERT
SHUNT
REVERSE
POWER
LOAD ON/OFF
BRT
MATRIX
SLIDE
AUTO AUDIO
AUTO PROGRESSION
PWR BD 1
PWR BD 2
LOGIC BOARD
110V/6.3V .3A XFMR
AUDIO IN
JONES S310AB
15A FUSE
AC INPUT
R9 WIRING DIAGRAM
REV MAR 8/85
D. Fraser

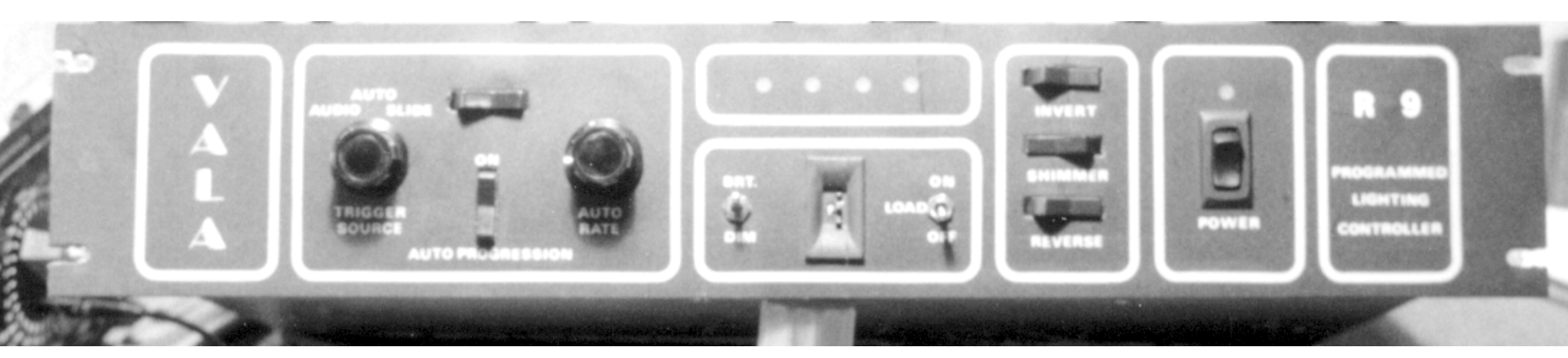
VALA
AUTO
AUDIO
SLIDE
TRIGGER SOURCE
ON
AUTO RATE
AUTO PROGRESSION
DRT.
DIM
LOAD
ON
OFF
INVERT
SHIMMER
REVERSE
POWER
R 9
PROGRAMMED LIGHTING CONTROLLER

ALL MEASUREMENTS INCLUDE THICKNESS OF METAL

HOLES MARKED "A" @ 9/64" DIA (5 TOTAL)
HOLES MARKED "B" @ 3/32" DIA (2 TOT.)
ALL OTHER HOLES @ 3/16" DIA (22 TOT.)
29 HOLES TOTAL

SCALE: 1 INCH = 2 DIVISIONS

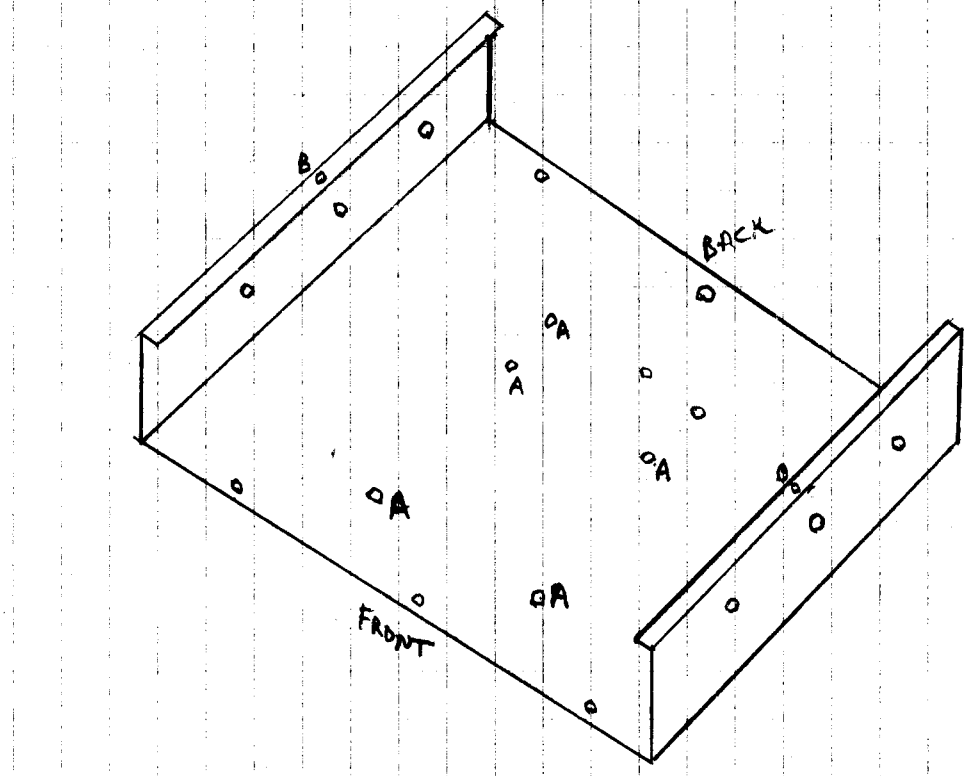

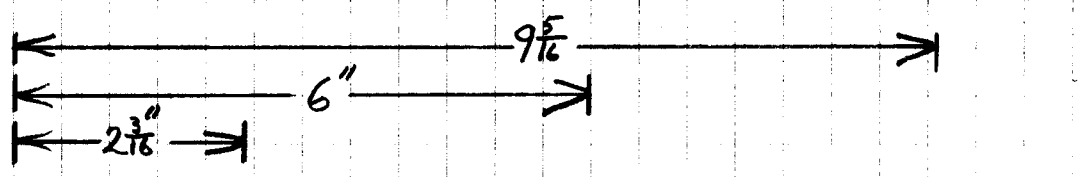

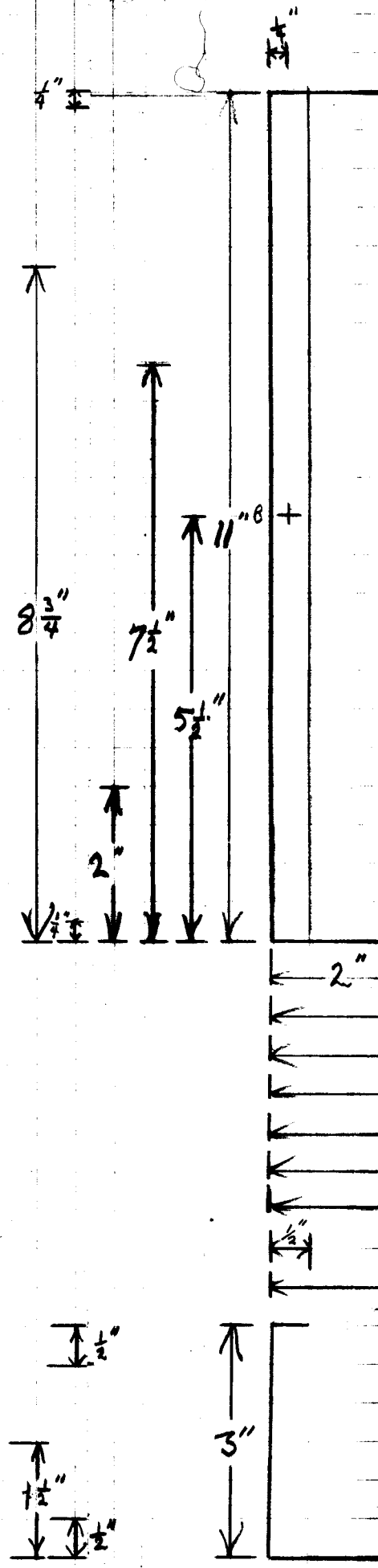

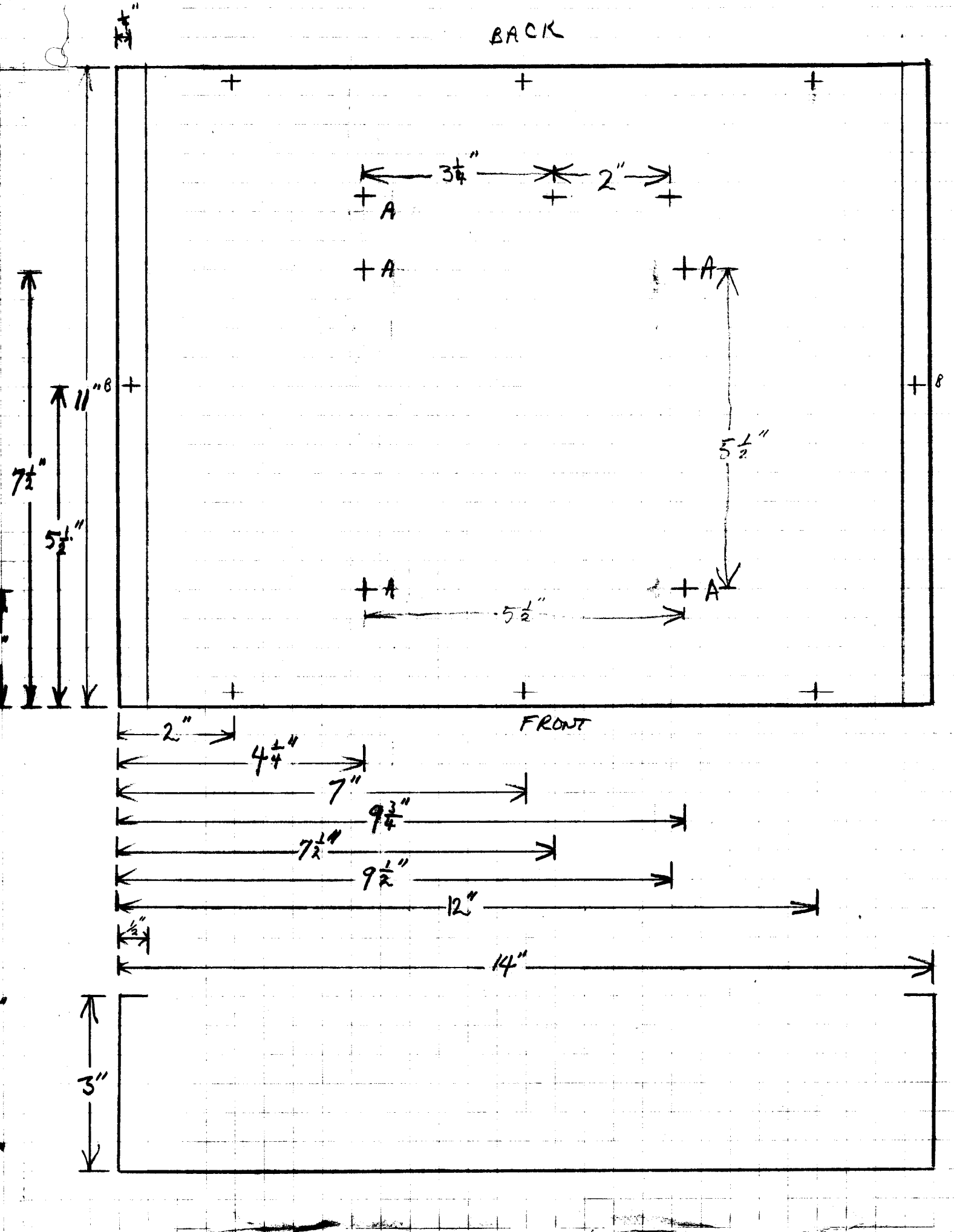
BACK
3¼"
2"
A
A
A
A
A
11"
B
B
7½"
5½"
5½"
5½"
FRONT
2"
4¼"
7"
9¾"
7½"
9½"
12"
½"
14"
3"

P.O. BOX 778 - EDMONTON, ALBERTA T5J 2L4 - (403) 454-5412

Rear

1 of

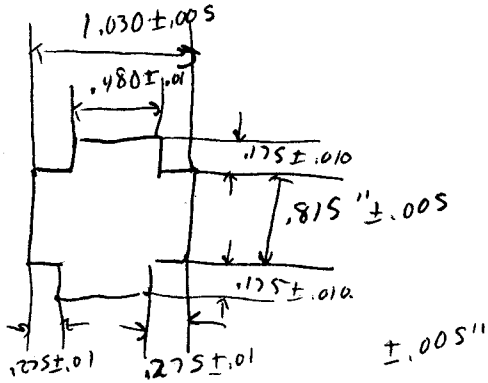

1 - 1/2" Round or standard base punch

1 - .875 K.O. punch

1 - 11mm CLIFF JACK

1 - 9/64 GND CUT.

BOTTOM = 11 + PCB = 4 + 9/64

2 - + FMR 2 + 3/16

sides ea 3 + 3/16.

FRONT Panel 1 + 13mm 5 + 5.1mm 2 + 9.5mm 6 = 1/4 + 3/4

1 - T.W. SW.

SUB PANEL. 1 + 13mm 5 + 9.5mm 2 + 9.5mm 6 = 1/4 + 3/4 or SLIGHTLY LARGER

1 5 + 9/64

1 - TW SW (1 3/8" ϕ).

Rear Panel Hole for Amp connector

Pre Heat circuit for lamps.

power-3 sec
Ad 1-31 sec.
walk 18 sec.

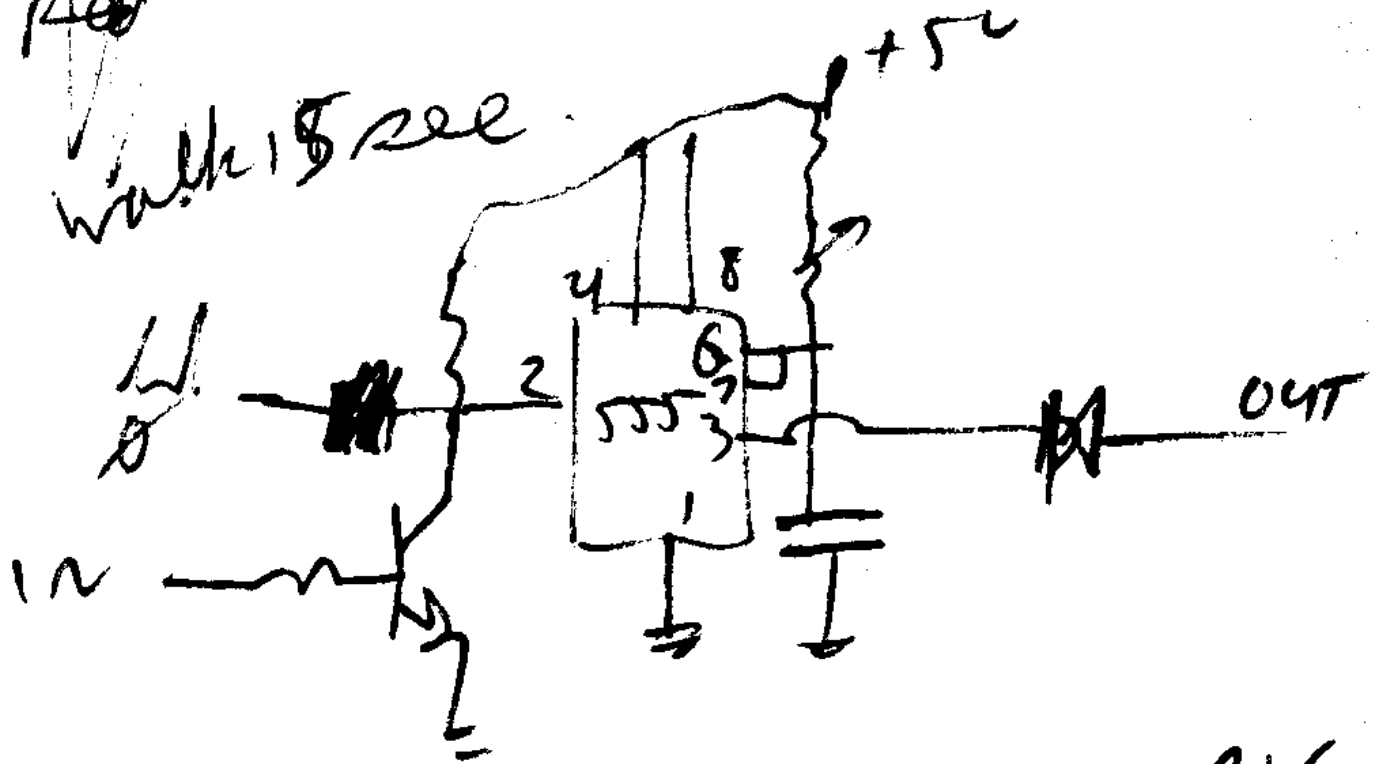

USED WHEN CHASING BIG LAMPS WITH THERMAL LAG.

External Zone Box for use with R9 controller

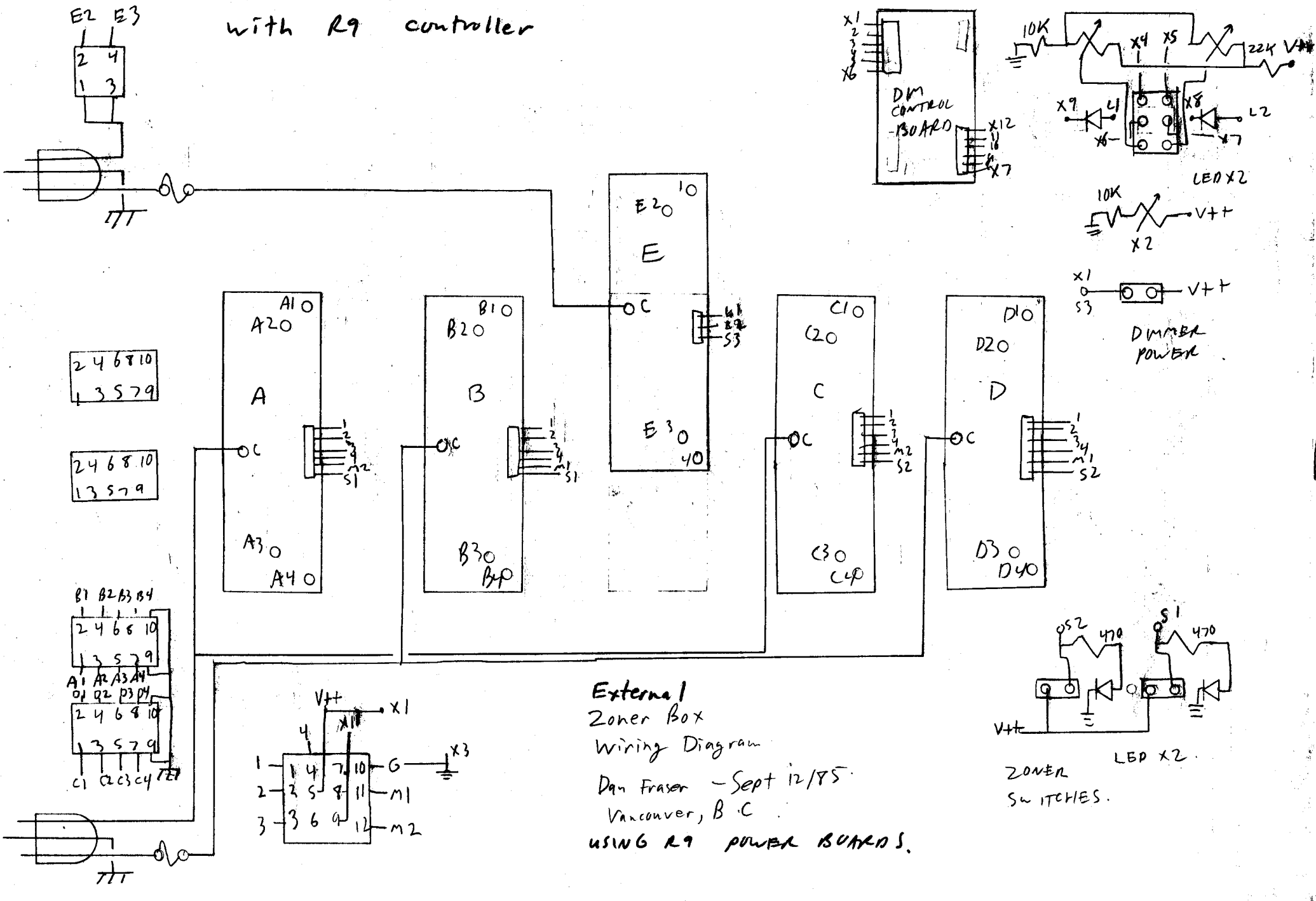

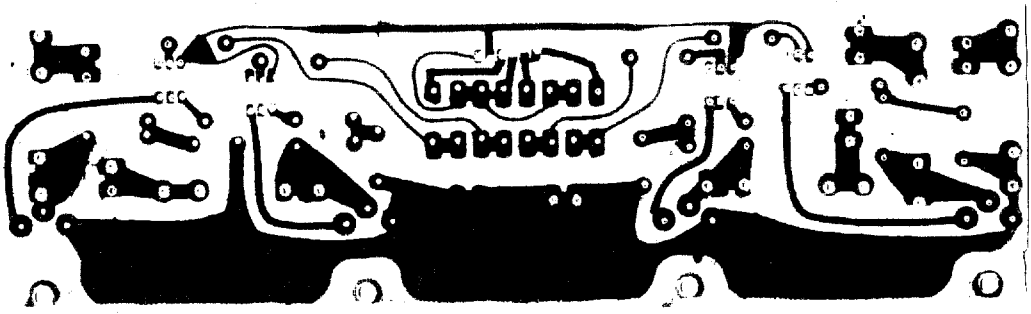

MATRIX POWER BOARD

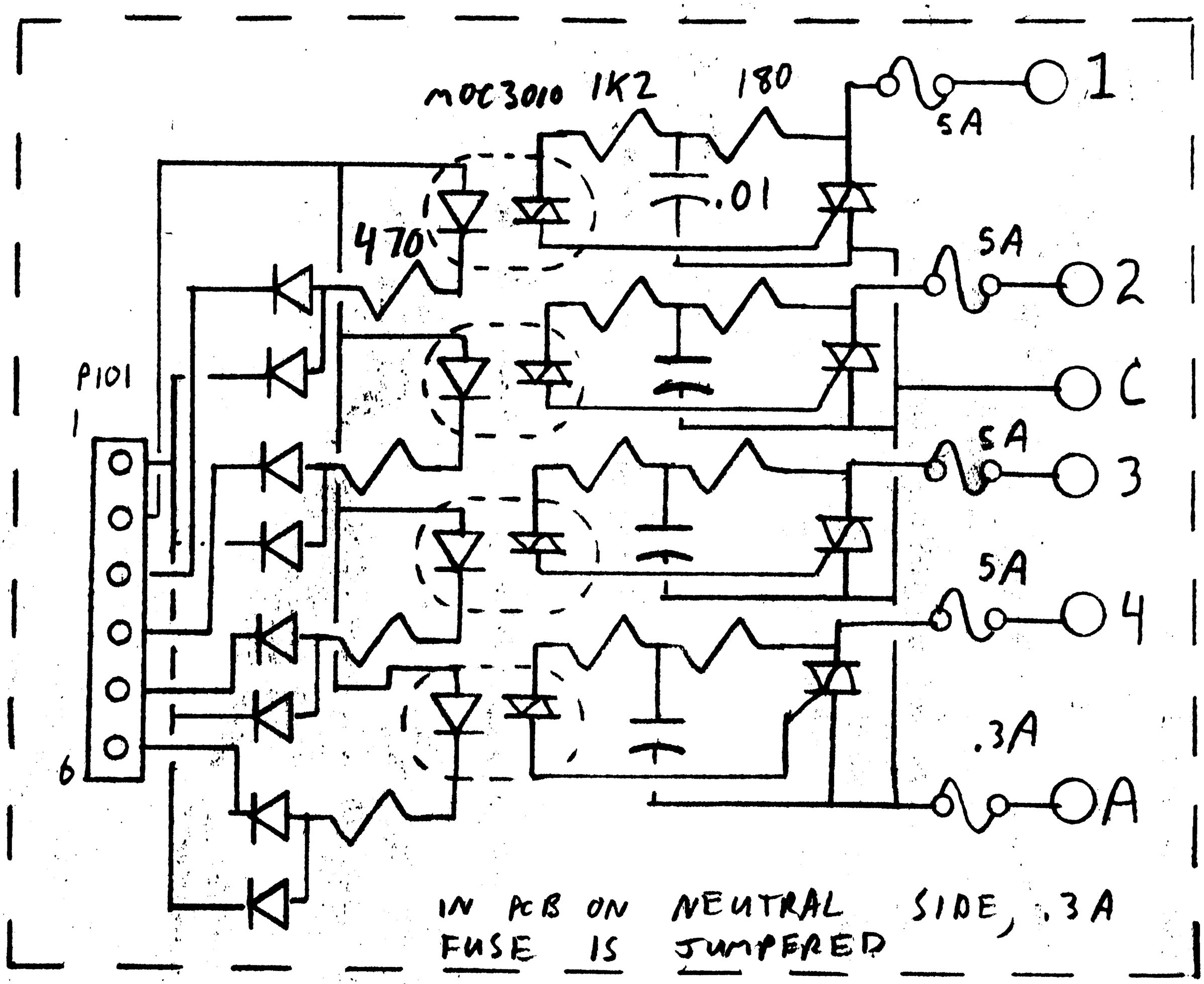

C01-02 1000ufd/10-16V .3"-.5" 2 Pcs. .70 ea. M PCB Power Supply Filters
C03 0.1 mFd/50V .4" .15 M PCB Low Pass Filter
C04 1uFd/16-50V .2" .20 M PCB IC 9C Input Cap
C05 0.0022uFd .4" .15 M PCB Low Pass Filter
C06 10uFd/10-25V .2" .20 M PCB IC 9C Output Cap
C07 1uFd/16-50V .1" .20 M PCB AGC Filter Cap
C08 .1ufd/50V .3" .15 M PCB Peak Det Filter
C09 0.015uFd .4" .15 M PCB Auto Timing Cap
C10 100uFd/6.3-10V .1" .22 M PCB Slide Osc Timing Cap
D01 Bare Jumper .5" .01 M PCB Zero Crossing Sw
D02 Omit M PCB
D03 1N4148 .5" .06 M PCB Clock Level Shifter
D04-07 1N4148 .2" 4 Pcs. .06 ea. M PCB Shimmer Diodes
D08-09 1N4148 .3" 2 Pcs. .06 ea. M PCB Matrix Auto Prog. Sw.
D10-13 1N4001 .5" 4 Pcs. .08 ea. M PCB Power Supply Rectifiers
D14 1N4733 .5" .25 M PCB 5.1V/1W Zener Regulator
D15-16 1N4148 .5" 2 Pcs. .06 ea. M PCB Shimmer Gate
D17 1N4148 .5" .06 M PCB AGC Detector
D18 1N4148 .5" .06 M PCB Audio Peak Detector
D19 1N4148 .5" .06 M PCB Slide Level Shifter
D36 1N4148 .5" .06 M PCB Shimmer Inhibit
IC1 4040 1.43 M PCB Chase Counter
IC2 4019 or 4519 1.08 M PCB Effect Select Auto Prog Sw.
IC3 6301 or 74S287 RAE 5.70 M PCB Effects PROM
IC4 4019 or 4519 1.08 M PCB Reverse Control
IC5 4070 .62 M PCB Invert Control
IC6 4001 .53 M PCB Matrix Auto Prog Control
IC7 4013 .48 M PCB Zero Crossing Sw
IC8 4019 or 4519 1.08 M PCB Auto Prog Select for Switches
IC9 LM3900 1.15 M PCB Audio Proc/VCO
J1 Ins. Jumper 2.9" .02 M PCB P5 to IC 2-9
J2 Ins. Jumper 1.0" .02 M PCB IC 9-1 to R41
J3 Ins. Jumper 1.0" .02 M PCB IC 9-6 to R43
J4 Ins. Jumper 1.0" .02 M PCB Q6 Coll to P1-3
J5 Bare Jumper .2" .02 M PCB Through Board Jumper
P01 640454-6 Amp .38 M PCB To LED's/Brt Sw/Load Sw.
P02 640454-6 Amp .38 M PCB To Power Board
P03 640454-6 Amp .38 M PCB To Power Board
P04 640454-4 Amp .33 M PCB To Xfmr/DC to Front Panel
P05 640454-4 Amp .33 M PCB To Modifier/Auto Prog Sw's
P06 1-640454-0 Amp .50 M PCB To Audio/Rot Sw/Matrix Sw.
P07 640454-4 Amp .33 M PCB To Thumbwheel Switch
PCB-Main Fraser Electronics 15.00 M PCB Double Sided Logic PCB
Q01 2SC458 .13 M PCB Zero Crossing Switch
Q02 2SC458 .13 M PCB Invert Sw Inverter
Q03-06 2SC458 4 Pcs. .13 ea. M PCB Output Drivers
Q07 2SC2120 .23 M PCB Dim Switch
Q08 2SC458 .13 M PCB Shimmer Inhibit
Q09 2SC458 .13 M PCB Shimmer Control
Q10 2N3906 .18 M PCB Shimmer Control
Q11 2SC458 .13 M PCB Auto Prog Inverter
Q12 2SC2120 .23 M PCB Matrix Auto Prog. Sw.
Q13-14 2SC458 2 Pcs. .13 ea. M PCB Matrix Auto Controls
Q15 2SC458 .13 M PCB AGC Control Device
Q16 2SC458 .13 M PCB AGC Control Device Driver
Q17 2N3906 .18 M PCB Slide Osc
Q18 2SC458 .13 M PCB Slide Osc
Q19 2SC458 .13 M PCB VCO Discharge
R01-04 9K1-30K .5" 4 Pcs. .02 ea. M PCB Thumbwheel Pull-ups
R05 27-33 ohm/1Watt .8" .07 M PCB 5V Supply Dropping Res.
R06 9K1-30K .5" .02 M PCB IC 4-14 Pull-up
R07 47K-100K .5" .02 M PCB Q2 Base Current Limit
R08-11 9K1-12K .5" 4 Pcs. .02 ea. M PCB Output Q Base Current Limit
R12 9K1-12K .5" .02 M PCB Q7 Base Current Limit
R13 9K1-30K .5" .02 M PCB IC 7-5 Pull-up

R13 9K1-30K .5" .02 M PCB IC 7-5 Pull-up
R14 9K1-30K .5" .02 M PCB IC 7-3 Pull-up
R15 47K-100K .5" .02 M PCB Q1 Base Current Limit
R16 47K-100K .2" .02 M PCB Q8 Base Current Limit
R17 9K1-30K .4" .02 M PCB IC 8-2 Pull-up
R18 47K-100K .5" .02 M PCB Q9 Base Pull-up
R19 10K .5" .02 M PCB Q10 Base Pull-down
R20 3K0 .5" .02 M PCB Q10 Base Pull-up
R21 2K2 .6" .02 M PCB Q10 Coll Pull-down
R22 1K0 .5" .02 M PCB Shimmer Current Limit
R23 9K1-15K .5" .02 M PCB Q13 Base Current Limit
R24 9K1-15K .5" .02 M PCB Q14 Base Current Limit
R25 2K2 .6" .02 M PCB Auto Prog Sw Pull-up
R26 47K-100K .2" .02 M PCB Q11 Bass Current Limit
R27 1K0 .5" .02 M PCB Q11 Coll Pull-up
R28 47K-100K .6" .02 M PCB Q12 Base Current Limit
R29 22K 1/2 Watt .5" .02 M PCB Audio Input Filter
R30 100K .5" .02 M PCB AGC Attenuator
R31 1M0 .5" .02 M PCB Q15 Base Pull-down
R32 10K .5" .02 M PCB Q16 Coll Current Limit
R33 10K 1/2Watt .5" .02 M PCB Audio Input Ground Res.
R34 100K .5" .02 M PCB IC 9C Gain Set
R35 1M0 .5" .02 M PCB IC 9C Gain Set
R36 2M2 .25" .02 M PCB IC 9C Bias Set
R37 100K .5" .02 M PCB Q16 Base Current Limit
R38 100K .5" .02 M PCB IC 9D Gain Set
R39 1M0 .5" .02 M PCB IC 9D Gain Set
R40 150K .5" .02 M PCB C8 Discharge
R41 560K .5" .02 M PCB IC 9B Trigger Set
R42 1M0 .2" .02 M PCB IC 9B Trigger Set
R43 910K .25" .02 M PCB IC 9B Bias
R44 1M0 .5" .02 M PCB Q19 Base Current Limit
R45 1M8-2M2 .5" .02 M PCB IC 9A Charge Pump
R46 910K-1M0 .5" .02 M PCB IC 9A Charge Pump
R47 1K5 .5" .02 M PCB Slide Osc Trip Set
R48 1K0 .3" .02 M PCB Slide Osc Trip Set
R49 470K-560K .4" .02 M PCB Slide Osc Timing
R81 9K1-30K .5" .02 M PCB Mod Sw Pull-up
R82 9K1-30K .5" .02 M PCB Mod Sw Pull-up
R83 9K1-30K .4" .02 M PCB Mod Sw Pull-up
C01-02 1000ufd/10-16V .3"-.5" 2 Pcs. .70 ea. M PCB Power Supply Filters
C03 0.1 mFd/50V .4" .15 M PCB Low Pass Filter
C04 1uFd/16-50V .2" .20 M PCB IC 9C Input Cap
C05 0.0022uFd .4" .15 M PCB Low Pass Filter

Case Front 15.00 Front Panel
Case Sub-Front 8.00 Front Panel
Insulators .25" Crimp Conn Cover Keystone 4470 2 Pcs. EMX .30 ea. Front Panel Used if S2 has Tab Conns.
K1-2 Knobs 2 Pcs. Cliff K9 c/w caps. .50 ea. Front Panel
L09-12 #4 Lockwashers 3 Pcs. .02 ea. Front Panel LED & Pilot PCB Mtg.
L13-26 #4 Lockwashers .02 ea. Front Panel Switch Mounting
N09-12 4/40 Nuts 3 Pcs. .03 ea. Front Panel LED & Pilot PCB Mtg.
N13-26 4/40 Nuts .03 ea. Front Panel Switch Mounting
PCB-LED Fraser Elect 1.00 Front Panel
PCB-Pilot Fraser Elect. .50 Front Panel
PT1 100K Lin. Pot Mouser 31VA501 1.35 Front Panel Rate Control
R50 100K 3.5" .02 Front Panel Rate Range Set
R51 10K 2.2" .02 Front Panel Rate Range Set
S09-12 4/40 Flat Head Screw 1/2" 3 Pcs. .05 ea. Front Panel LED & Pilot PCB Mtg.
S13-26 4/40 Flat Head Screws 1/2" .05 ea. Front Panel Switch Mounting
S57 24 Ga. 2.0" .02 ea. Front Panel S3 to Thumbwheel Common.
SC01 640441-6 Amp .35 Front Panel To LED PCB
SC04 640441-4 Amp .28 Front Panel DC connector
SC05 640441-4 Amp .28 Front Panel To Mod Switches
SC06A 640441-5 Amp .32 Front Panel To Rotary Sw.
SC06C 640441-3 Amp .19 Front Panel To Matrix Sw.
SC07-08 .25" Crimp Conn Keystone 4475 2 Pcs. EMX .15 ea. Front Panel Used if S2 has Tab Conns.
SW01 2 Pole/3Pos. Rotary Mouser 10YX043 or YQ 1.55 Front Panel Auto/Audio Slide Sw.
SW02 15A 250Volt Toggle 4.00 Front Panel Power Switch
SW03 SPST Slide Mouser 576-S-2012SD04-0 .40 Front Panel Bright/Dim Sw.
SW04 SPST Slide Mouser 576-S-2012SD04-0 .40 Front Panel Load On/Off Sw.
SW05 SPST Slide Mouser 576-S-2012SD04-0 .40 Front Panel Invert Sw.
SW06 SPST Slide Mouser 576-S-2012SD04-0 .40 Front Panel Shimmer Sw.
SW07 SPST Slide Mouser 576-S-2012SD04-0 .40 Front Panel Reverse Sw.
SW08 SPST Slide Mouser 576-S-2012SD04-0 .40 Front Panel Auto Prog. Sw.
SW09 16 Pos. Binary Thumbwheel Unimax SF-54 w Ends Jameco 10.00 Front Panel Effect Selector
SW10 SPDT Centre-off Mini Toggle 2.50 Front Panel Matrix Control Sw.
Tubing 3/16" Dia. 2" .15 Front Panel Insulation for R50
W01-06 24 Ga. 8" 6 Pcs. .04 ea. Front Panel P1 to Leds/Load/Brt.Sw's.
W19-20 24 Ga. 10" 2 Pcs. .04 ea. Front Panel P4-3,4 to Front.
W23-25 24 Ga. 8" 3 Pcs. .04 ea. Front Panel P5 to Modifier Switches
W26 24 Ga. 15" .04 Front Panel P5 to Auto Prog Switch
W27-31 24 Ga. 10" 5 Pcs. .04 Front Panel P6A to Rotary Switch
W34-36 24 Ga. 10" 3 Pcs. .04 Front Panel P6C to Matrix Switch
W37-40 24 Ga. 5" 4 Pcs. .04 ea. Front Panel P7 to T/W Switch
W55 24 Ga. 3.5" .02 ea. Front Panel S1 to Pot.
W56 24 Ga. 3.5" .02 ea. Front Panel S8 to S3
W58 24 Ga. 3.5" .02 ea. Front Panel Rev. Sw. to Thumbwheel Common
W59 24 Ga. 2.0" .02 ea. Front Panel Rev. Sw. to Shimmer Sw.
W60 24 Ga. 2.0" .02 ea. Front Panel Invert Sw. to Shimmer Sw.
W61 24 Ga. 3.5" .02 ea. Front Panel Invert Sw. to Pilot PCB-
W62 24 Ga. 2.0" .02 ea. Front Panel Load Sw. to LED PCB+
W63 24 Ga. 5.0" .02 ea. Front Panel LED PCB+ to Pilot PCB+

C11-18 .01-.05 ufd/400V .4" 8 Pieces .20 ea. Power PCB Noise Filter Cap
D20-35 1N4148 .4" 16 Pieces .06 ea. Power PCB Matrix Control Diodes
F01-08 5A Fast Blow 8 Pcs. Electel .10 ea. Power PCB Triac Fuses
F09 .2-.3A Slow Blow .40 Power PCB Xfmr Fuse
Flange 9" 1"X1" Aluminum 2 Pieces 2.00 ea. Power PCB Heatsinks
Fuse Clips Keystone 3529 or 3514 18 Pcs EMX .11 ea. Power PCB PCB Fuse Clips
J6 Bare Jumper 1.5" .02 Power PCB Fuse Bypass for Neutral PCB
L01-08 #4 Lockwashers 8 Pieces .02 ea. Power PCB Triac Mounting
N01-08 4/40 Nuts 8 Pieces .03 ea. Power PCB Triac Mounting
Opto 1-8 MOC3010 8 Pieces 1.41 ea. Power PCB Triac Drivers
P08-09 640454-6 2 Pieces Amp .36 ea. Power PCB Logic Input
PCB-Power 2 Pieces Fraser Elect. 3.50 ea. Power PCB Load Switching Board.
R57-64 470-510 ohm .5" 8 Pieces .02 ea. Power PCB Opto Current Limiters
R65-72 820 ohm-1K2 1/2 Watt .5" .03 ea. Power PCB Triac Trigger
R73-80 68-180 ohm 1/2 Watt .5" .03 ea. Power PCB Triac Trigger
S01-08 4/40 Pan Head Screws 1/2" 8 Pieces .03 ea. Power PCB Triac Screws
Tabs Keystone 1287 12 Pcs. EMX .07 ea. Power PCB Power connectors
TR1-8 IT-28 8 Pieces 1.35 ea. Power PCB Triacs

Case Rear 10.00 Rear Panel
Clamp 3/4" Cord Clamp .75 Rear Panel Power Cord Clamp
F10 15A Fast Blow .15 Rear Panel Main Fuse
Fuse Holder Chassis Mount 1.50 Rear Panel Main Fuse Holder
SC06B 640441-2 Amp .14 Rear Panel Audio Conn to PCB
SC09 Phone Jack Cliff S2/SNS .35 ea. Rear Panel Audio Input
SC10 1-480707-0 Not used with Jones plug. Amp .50 Rear Panel Output Connecter Shell
SC10 S310AB Not used with Amp plug. Cinch Jones 3.25 Rear Panel Output Connecter.
SC11-19 350551-1 Not used with Jones plug. 9 Pcs. Amp .10 ea. Rear Panel Socket Pins.
SC20-31 .25" Crimp Conn. Keystone 4470 12 Pcs. EMX .15 ea. Rear Panel Power PCB Conns.
Sticker 1.00 Rear Panel Pinout
W32-33 24 Ga. 10" 2 Pcs. .04 ea. Rear Panel P6B to Audio Jack.
W41 16 Ga. 5.25" .10 ea. Rear Panel S10-1(J1) to Power PCB
W42 16 Ga. 6.25" .10 ea. Rear Panel S10-2(J3) to Power PCB
W43-44 16 Ga. 12.5" 2 Pcs. .10 ea. Rear Panel S10-3,4(J5,7) to Power PCB
W45 14 Ga. 4.25" .10 Rear Panel S10-5(J9,10) to Ground
W46-47 16 Ga. 17.0" 2 Pcs. .10 ea. Rear Panel S10-6,7(J6,8) to Power PCB.
W48-49 16 Ga. 10.5" 2 Pcs. .10 ea. Rear Panel S10-8,9(J2,4) to Power PCB.
W64 14/3 8 Ft. 7.50 Rear Panel Power Cord

C11-18 .01-.05 ufd/400V .4" 8 Pieces .20 ea. Power PCB Noise Filter Cap
D20-35 1N4148 .4" 16 Pieces .06 ea. Power PCB Matrix Control Diodes
F01-08 5A Fast Blow 8 Pcs. Electel .10 ea. Power PCB Triac Fuses
F09 .2-.3A Slow Blow .40 Power PCB Xfmr Fuse
Flange 9" 1"X1" Aluminum 2 Pieces 2.00 ea. Power PCB Heatsinks
Fuse Clips Keystone 3529 or 3514 18 Pcs EMX .11 ea. Power PCB PCB Fuse Clips
J6 Bare Jumper 1.5" .02 Power PCB Fuse Bypass for Neutral PCB
L01-08 #4 Lockwashers 8 Pieces .02 ea. Power PCB Triac Mounting
N01-08 4/40 Nuts 8 Pieces .03 ea. Power PCB Triac Mounting
Opto 1-8 MOC3010 8 Pieces 1.41 ea. Power PCB Triac Drivers
P08-09 640454-6 2 Pieces Amp .36 ea. Power PCB Logic Input
PCB-Power 2 Pieces Fraser Elect. 3.50 ea. Power PCB Load Switching Board.
R57-64 470-510 ohm .5" 8 Pieces .02 ea. Power PCB Opto Current Limiters
R65-72 820 ohm-1K2 1/2 Watt .5" .03 ea. Power PCB Triac Trigger
R73-80 68-180 ohm 1/2 Watt .5" .03 ea. Power PCB Triac Trigger
S01-08 4/40 Pan Head Screws 1/2" 8 Pieces .03 ea. Power PCB Triac Screws
Tabs Keystone 1287 12 Pcs. EMX .07 ea. Power PCB Power connectors
TR1-8 IT-28 8 Pieces 1.35 ea. Power PCB Triacs

Case Bottom 8.00 Chassis
Case Cover 3.50 Chassis
HS1 Heatshrink Tubing 3/4" X 1/4" Dia. Omit if cord is wired direct to power switch. .10 Chassis Cord hot.
HS2 Heatshrink Tubing 1.5" X 1/4" Dia. Omit if cord wired direct to power board .20 Chassis AC Cord Neutral.
L27-34 #6 Lockwasher 8 Pcs. .03 ea. Chassis
Lugs #6 Solder Lugs 2 Pcs. EMX .03 ea. Chassis Ground Lugs.
N27-34 6/32 Nuts 8 Pcs. .04 ea. Chassis
P10 1-480706-0 Not used with Jones plug. Amp .60 Chassis O/P Male Conn Shell
P11-18 350552-1 Not used with Jones plug. 8 Pcs. Amp .10 ea. Chassis O/P Conn Shell Pins
P19 350669-1 Not used with Jones plug. Amp .10 Chassis O/P Conn Shell Gnd Pin.
Rivets 1/8" Dia. Pop SD43 20 Pcs. .04 ea. Chassis
S27-34 6/32 Pan Head 1/2" 8 Pcs. .04 ea. Chassis
S35-40 #6 Pan Head 1/4" 6 Pcs. .03 ea. Chassis Lid Mounting.
S41-44 6/32 Pan Head 1/2" 4 Pcs. .05 ea. Chassis Main PCB Mtg.
SC02-03,08-09 640441-6 4 pcs. Amp .35 ea. Chassis Logic To Power PCB Jumpers
Spacers Cliff 1/2" 4 Pieces .05 ea. Chassis Main PCB Spacers
T1 6V/300mA 8.50 Chassis Power Xfmr.
W07-12 24 Ga. 12" 6 Pcs. .04 ea. Chassis P2 to P8
W12-18 24 Ga. 12" 6 Pcs. .04 ea. Chassis P3 to P9
W21-22 24 Ga. 4" 2 Pcs. .04 ea. Chassis P4-1,2 to Pwr Xfmr.(Opt.)
W50 14 Ga. 13.5" .13 ea. Chassis Fuse Holder to Hot Pwr PCB.
W51 14 Ga. 15" .13 ea. Chassis Fuse Holder to Power Switch
W52 14 Ga. 15" .13 ea. Chassis Cord to Power Switch(Opt.)
W53 14 Ga. 6.5" .13 ea. Chassis Cord to Neutral Power PCB.
W54 18 Ga. 12.5" .07 ea. Chassis Xfmr to Power PCB

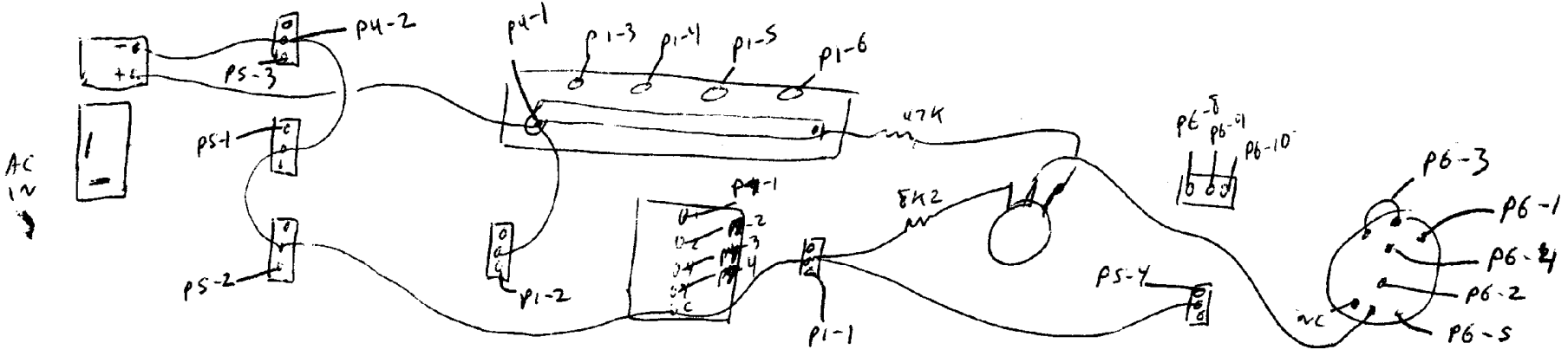
AC IN
P4-2
P5-3
P5-1
P5-2
P4-1
P1-3
P1-4
P1-5
P1-6
47K
P1-2
P4-1
8K2
P1-1
P5-4
P6-8
P6-9
P6-10
P6-3
P6-1
P6-4
P6-2
NC
P6-5

MATRIX POWER BOARD

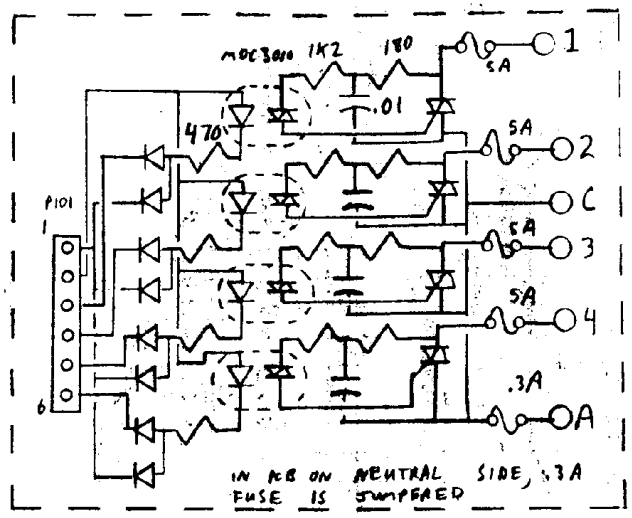

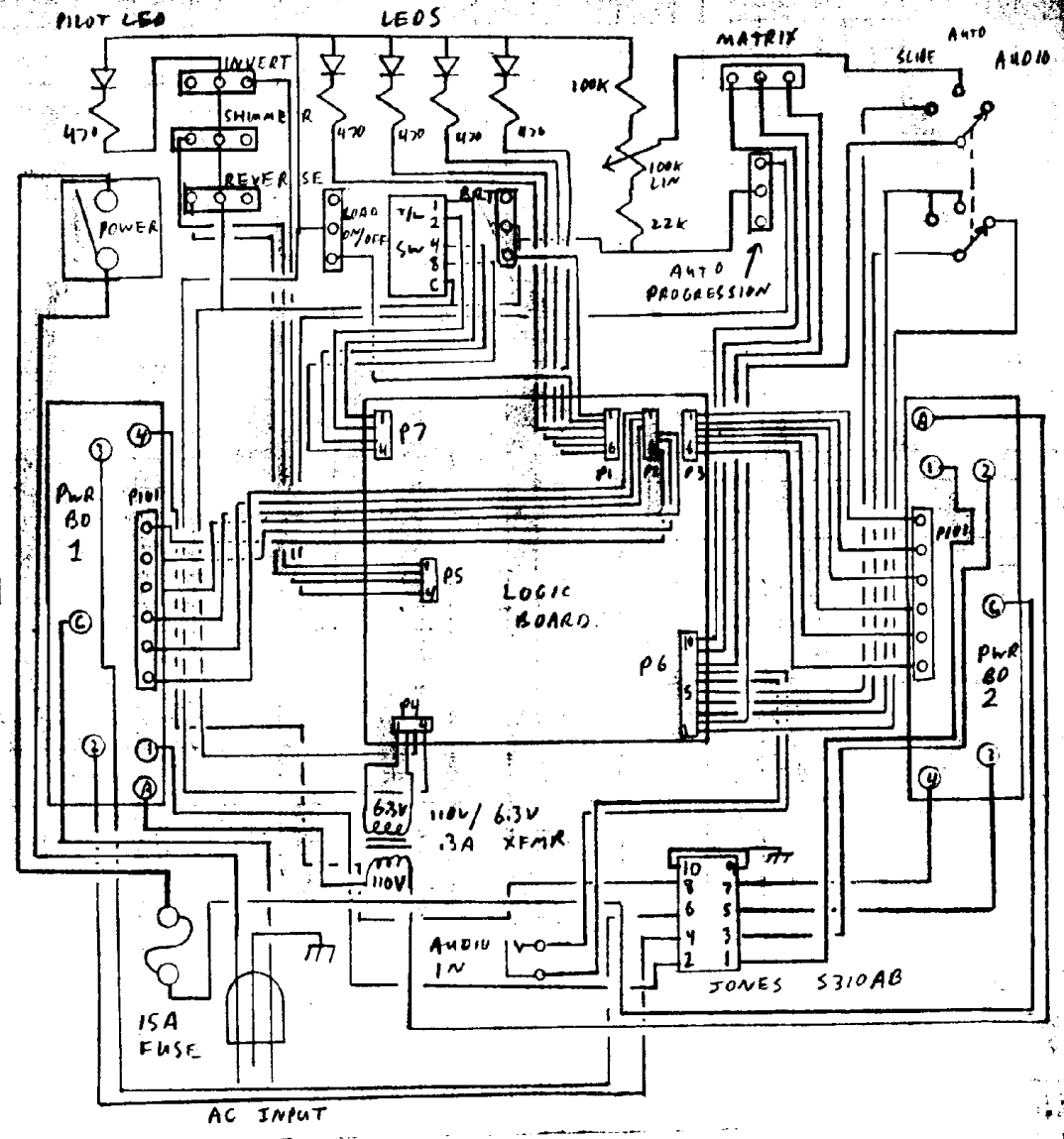

R9 WIRING DIAGRAM

REV MAR 8/85

D. Fraser