Walking Ring Sequencer

By S.P. Giles
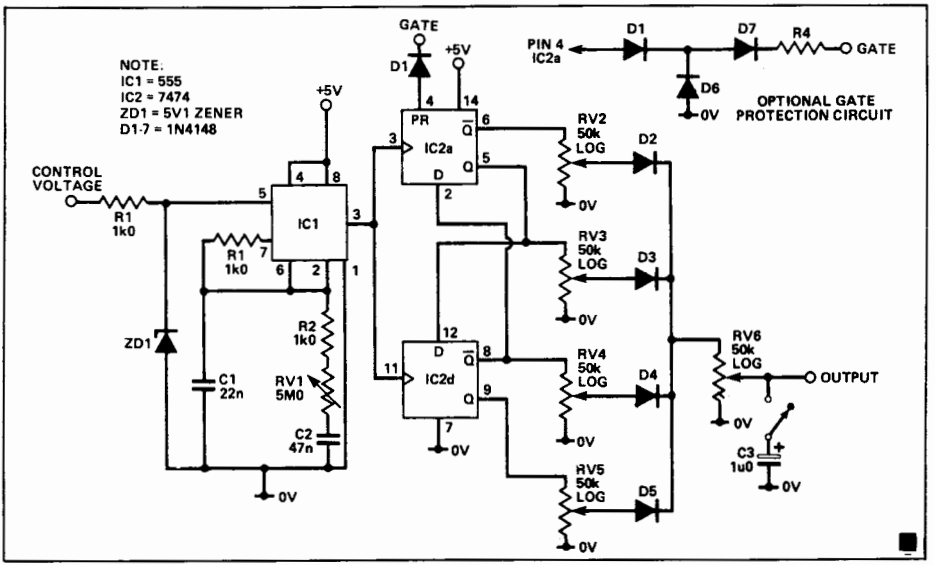
This circuit is useful for generating voltages for note sequences, gating, controlling filters, etc. A 555 timer is used as a simple voltage controlled clock with the 5 meg pot determining sequence speed along with the voltage at the control voltage input. This input will vary the speed with a positive voltage applied. This function is non-linear, has a 3:1 range and increases speed as the voltae decreases. The range is 2Hz to 7KHz; the outputs overlap so the final output is apparent as four steps. Negative inputs should not be applied without the optional gate protection circuit. The 1u0 cap and switch provide a slide function.