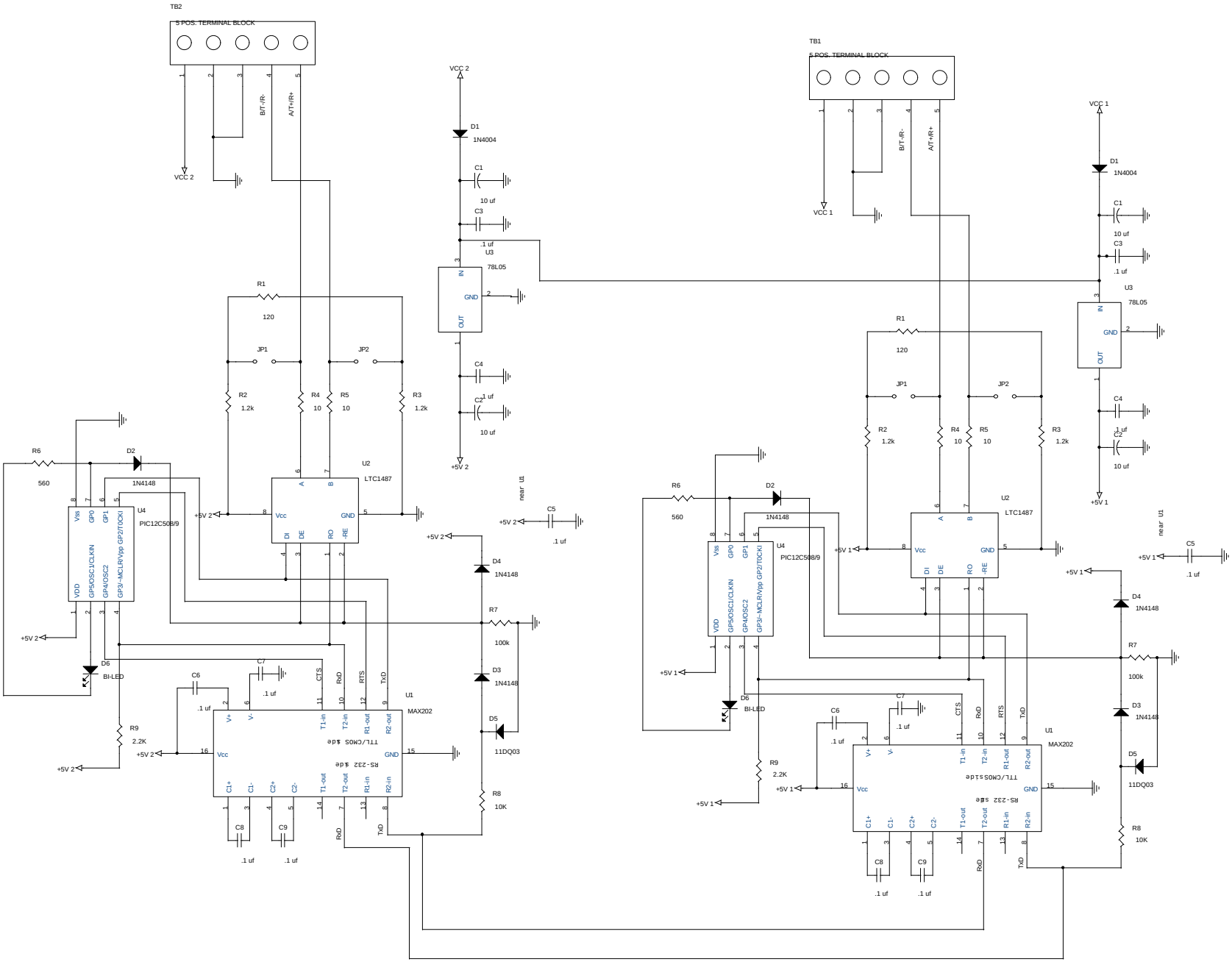

Title	485-RPT SCHEMATIC	
Size C	Document Number <Doc>	Rev
Date: Wednesday, May 16, 2001	Sheet 1 of 1	