Experimenting with Electronics

by PETER PHILLIPS

Stepper motors and how they work

This month we look at stepper motors, and how they actually work. Because there are various types that can all be driven in various ways, we don't have space to get into experimental circuits until next month. Then we'll describe two circuits — one that uses a dedicated IC, the other a transistor interface to a computer.

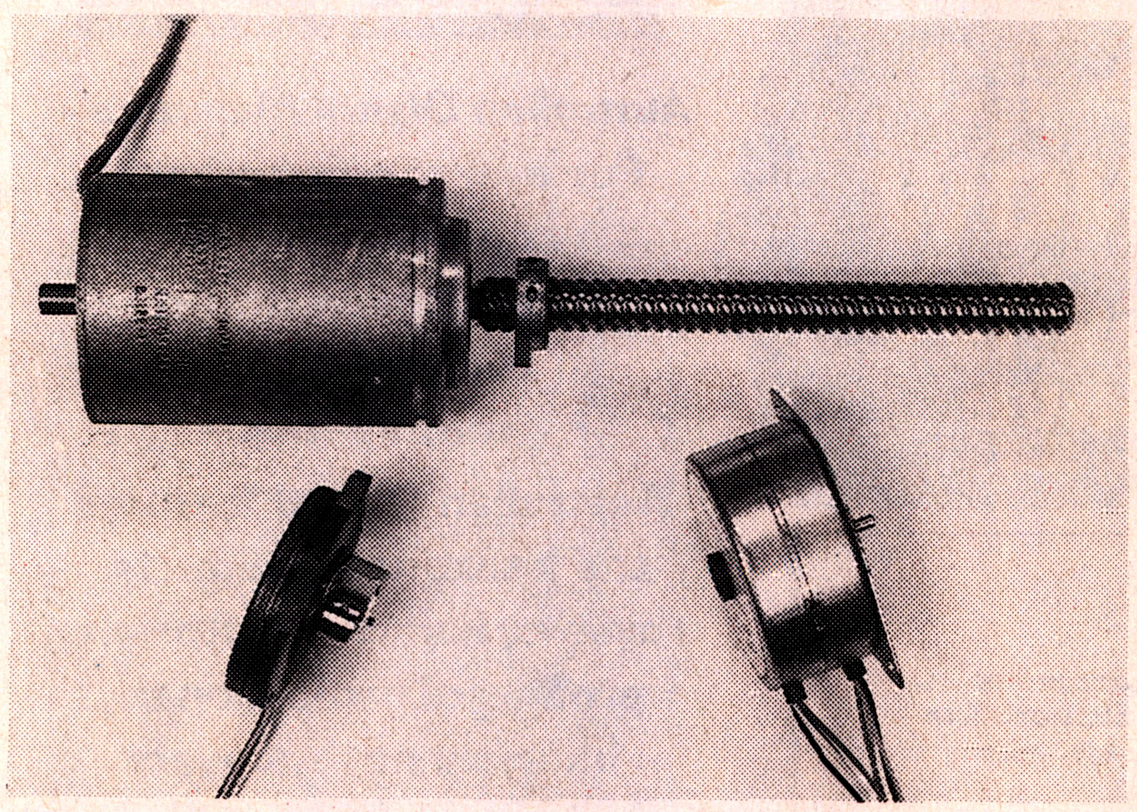

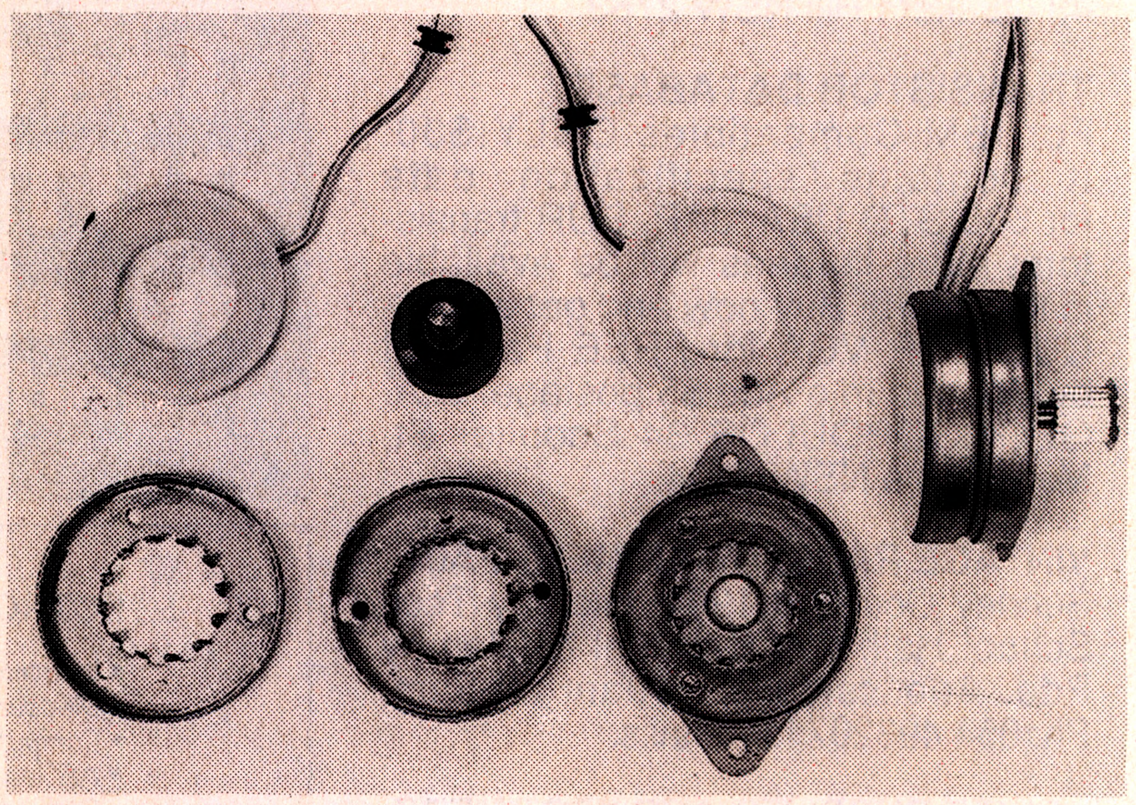

Left: These stepper motors come from (top) an old 8" hard disk drive, (bottom left) a 5.25" IBM compatible disk drive, (bottom right) a dot matrix printer. Right: The assembled stepper motor is on the right. At the top are the two coils with the magnetised rotor in between. The stator assembly is arranged along the bottom.

Despite their widespread use, I'll bet quite a few readers don't know how stepper motors work. As you'll see, they are quite simple devices, although driving them with discrete components is not easy. Fortunately, there's an IC that does all the work.

However many stepper motors, both large and small, are driven by a microprocessor or a computer program. We can't get into programming details, but we can look at interfacing a stepper motor to a PC and explain what's needed to make it run.

In case you're wondering why you should bother with a complex thing like a stepper motor, consider this: A stepper motor can be made to turn in exact increments, either very slowly or very quickly. It can be reversed and locked in position. The output torque of a stepper motor can be quite substantial, even at ridiculously low speeds. Power supply requirements are not critical, and given there's an inexpensive IC that does all the work, driving the motor is often no more complex than operating a conventional DC motor.

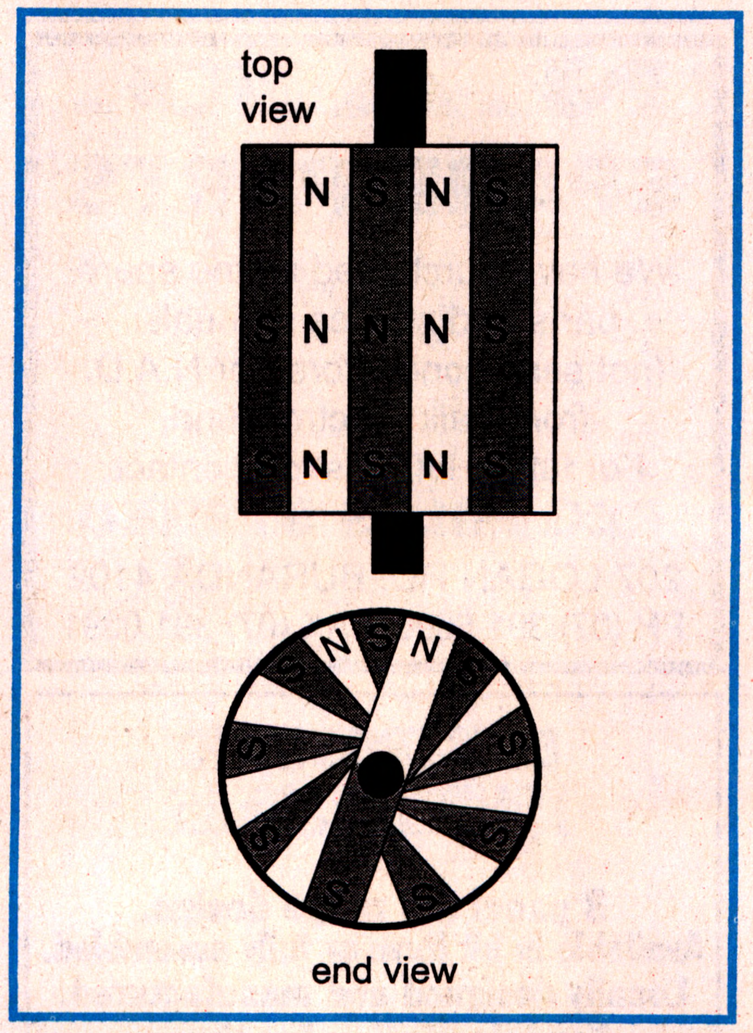

Fig.3: The rotor of a stepper motor is magnetised with alternate north and south poles.

So where are we heading? First up is the stepper motor itself. There are various types, although we will concentrate on the most common type: the six-wire dual coil type. Following this is a look at how to drive a stepper motor. Next month will come the circuit details of two ways of driving a stepper motor, including a description of the 5804 stepper motor driver IC. Also, I'm going to describe how to interface a stepper motor to a remote control system.

First we start by examining how a typical stepper motor works.

The stepper motor

There are many kinds of stepper motors, ranging in size, power, and *resolution*. Resolution refers to the smallest angular amount that the motor can step, and is usually given in degrees. The motor being described here has a resolution of 7.5°, which means it

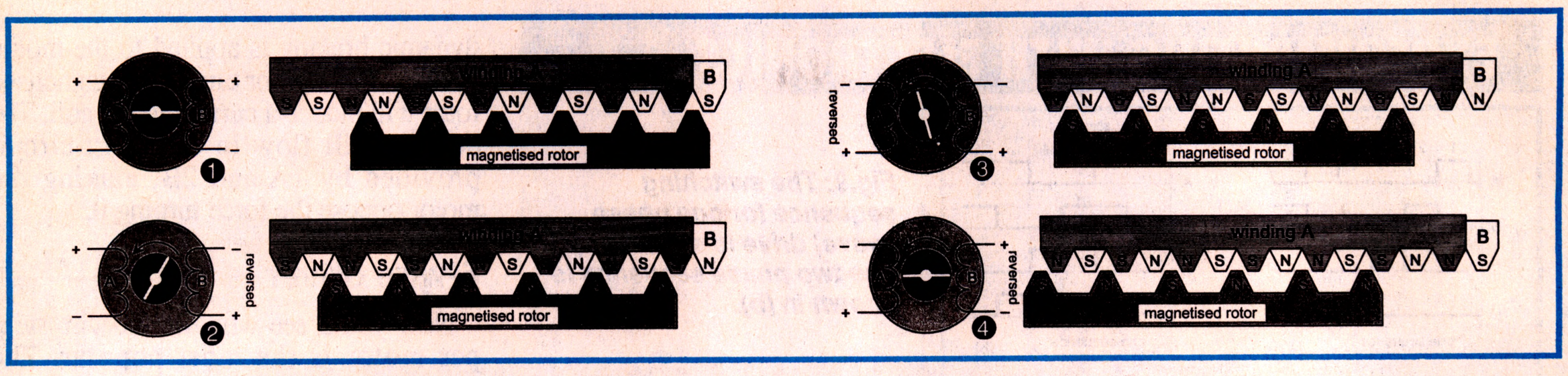

Fig.4: This diagram shows the rotor and stator of a stepper motor 'rolled out' into straight sections. By alternately reversing the polarity of the DC supply to each coil, the rotor 'steps' one tooth at a time.

needs 48 pulses to make it turn 360°, or one revolution.

Three different stepper motors are shown in Fig.1. The top motor is from a large hard disk drive, the small motor at the bottom left is from an IBM compatible 5.25" disk drive. It has a resolution of 1.8°, requiring 200 pulses per revolution. The remaining motor is from a dot-matrix printer.

Stepper motors are therefore easy to obtain, as they are used in most computer disk drives, printers, some electric typewriters, small robots and so on. As well, they are often sold as 'specials' in electronic shops — perhaps as disposal stock.

The motor we are examining (and using) is shown 'exploded' in the photo of Fig.2. This motor was supplied by Oatley Electronics and is a typical example of an inexpensive, 7.5° stepper motor. It is rated at 5V, and the gear fitted on the shaft (it can be taken off if necessary) has a pitch to match gears used in most printers. The hard steel rotor is magnetised with alternate north and south poles, as shown in Fig.3. There are actually 24 magnets in the motor of Fig.2, giving 48 alternate north and south poles around the circumference of the rotor.

The stator is made of three parts. If you examine the photo in Fig.2 you might be able to make out the 12 teeth on each of the three sections.

When assembled, the teeth of the centre section fit between those of the top and bottom parts. The two centre- tapped coils fit around the teeth. When a coil is energised,

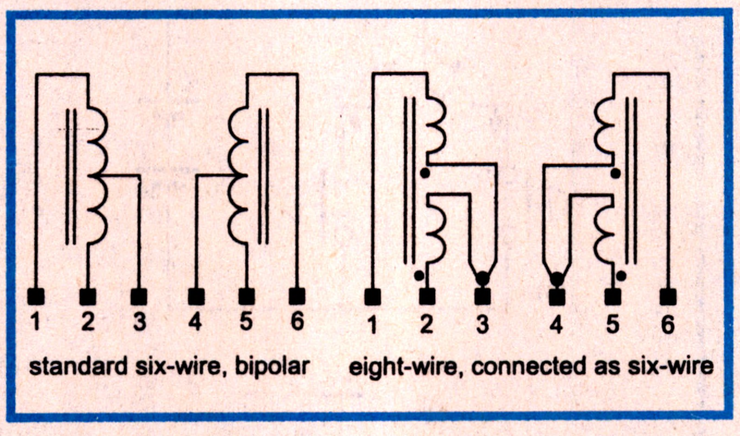

Fig.6: Most stepper motors have six wires, connected as shown here. An eight wire motor can be configured as a six wire type as also shown.

each tooth becomes a magnetic pole with adjacent teeth having the opposite magnetic polarity.

If you have ever pulled a synchronous clock motor apart, you'll be familiar with this arrangement. In fact, a stepper motor is rather like two clock motors back to back. So if you 'unroll' the rotor and the stator, you get something like that shown in Fig.4.

How a stepper works

To simplify the description, the diagrams in Fig.4 assume a four- wire motor. But when you understand one type of stepper motor, you'll find the others are similar.

The sequence to make the rotor turn goes like this: In diagram 1, the two windings are fed from a DC supply with the polarity shown. The magnetised rotor therefore positions itself with its north poles between the south poles of the stator, and its south poles between the north poles of the stator.

If the polarity of the DC supply to winding B is reversed, the poles induced by this coil change polarity to give the condition in diagram 2. The rotor now realigns itself, moving along one tooth.

In diagram 3, the supply polarity to winding A is now reversed, leaving B as it was. The poles induced in the stator by this winding change polarity, and the rotor moves one more step.

Leaving winding A at this polarity, the supply polarity to winding B is now reversed, as in diagram 4. Again there's a polarity change in the poles induced by winding B, and the rotor moves another step.

Reversing the polarity to winding A returns the conditions to diagram 1, and the sequence continues. In other words, to make the motor turn, the polarity to each winding is alternately reversed.

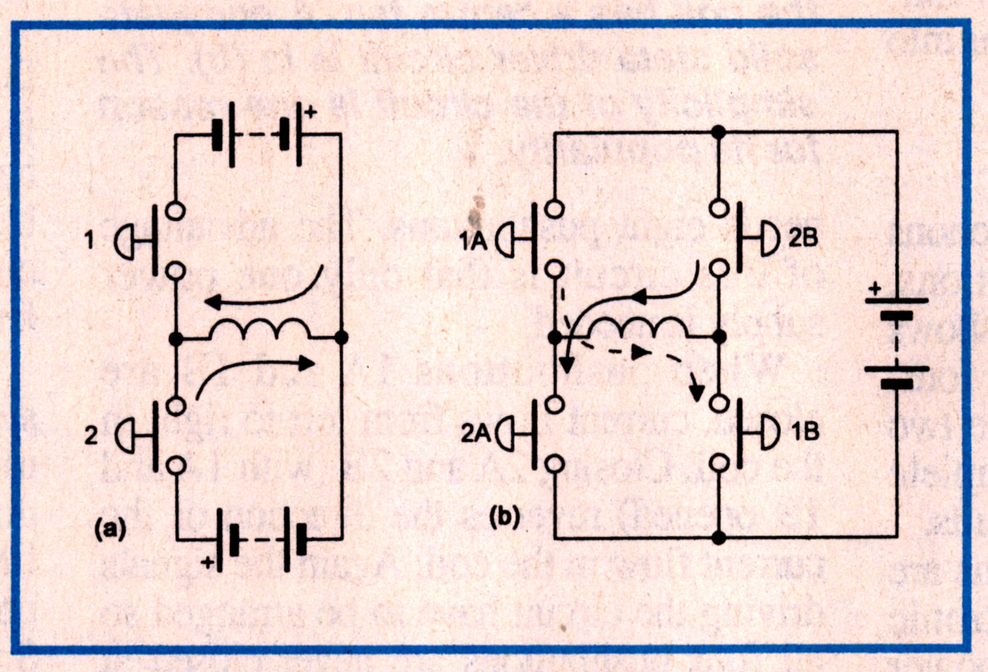

Fig.7: The half-bridge driver is shown in (a) where two power supplies are alternately switched to change the direction of the current in the stator. A full-bridge driver is shown in (b) which achieves the same thing, but with four switches and a single power supply. Note that only one coil per motor is shown, so double these circuits for the complete driver.

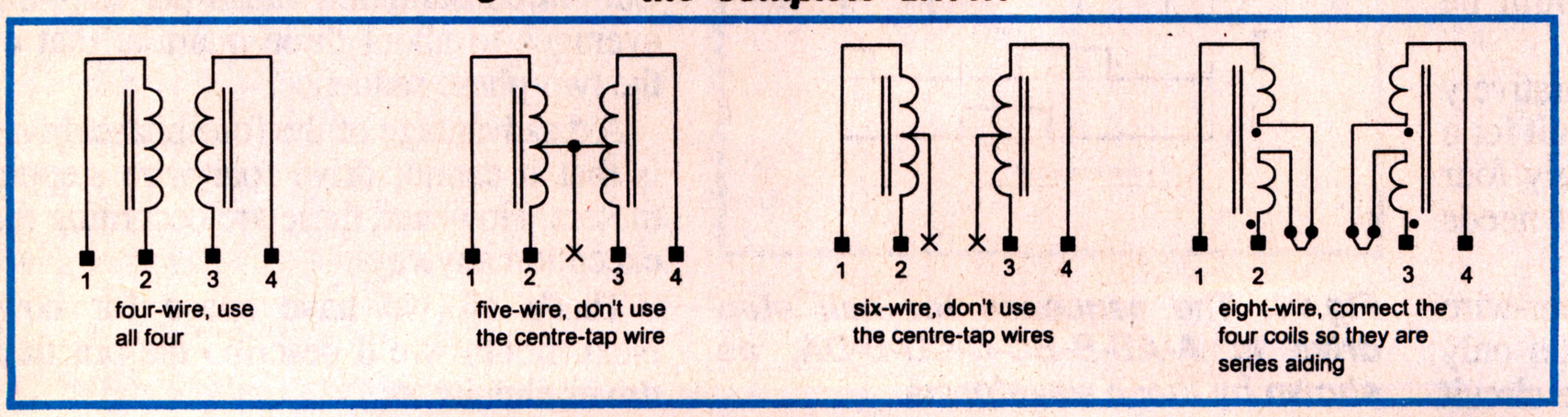

Fig.5: Stepper motors can have up to eight wires. This diagram shows how to connect the different configurations as a four wire motor.

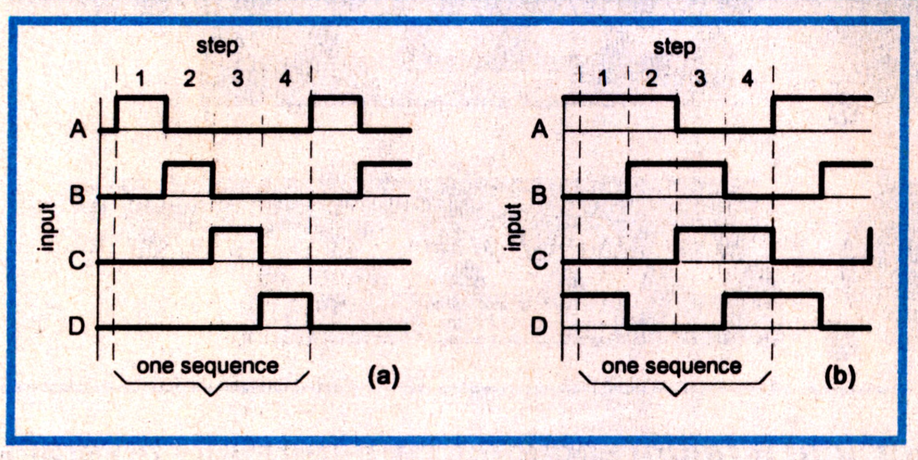

Fig.9: The switching sequence for one phase (wave) drive is shown in (a). The two phase sequence is shown in (b).

The direction of rotation depends on which winding receives a polarity reversal first. The speed of rotation depends on how rapidly the reversal sequence occurs.

Stepper motor connections

A stepper motor driver is an electronic switch driven to achieve the sequence described above. Before looking at driver circuits, we need to examine the internal connections of typical stepper motors. Usually, all you'll know about the motor is that it has a certain number of wires. Where they go will need to be determined with an ohmmeter and trial and error.

The most common stepper motor is the six-wire bipolar type. However, there are also four, five and eight-wire motors. The circuits in Fig.5 show how all of these types can be connected as a four-wire motor. The six-wire type has two centre-tapped coils, as shown in Fig.6. The connections to make an eight-wire motor into a six-wire type are also in Fig.6.

4-wire drivers

Given that the two popular connections are the four and six-wire connections, now for some driver circuits. Fig.7 shows in (a) the half-bridge driver for a four-wire stepper motor. Only one of the two motor coils is shown, so the complete driver would have two of these circuits.

In an actual circuit the pushbuttons are replaced with some type of electronic switch, such as a transistor or a power FET. So in (a), current flows in the motor coil from right to left when pushbutton 1 is pressed. Current flows in the opposite direction when pushbutton 2 is pressed. The signals driving the circuit have to be arranged to make sure that the two pushbuttons are never closed at the same time, as the two power supplies would be shorted out.

The half-bridge driver is comparatively simple, and a complete driver circuit for a four-wire stepper motor needs only four transistors. However the circuit needs two independent power supplies.

The full-bridge driver for a four-wire motor is shown in Fig.7(b). Again only one coil is shown, so the complete circuit needs eight pushbuttons. The advantage of this circuit is that only one power supply is needed.

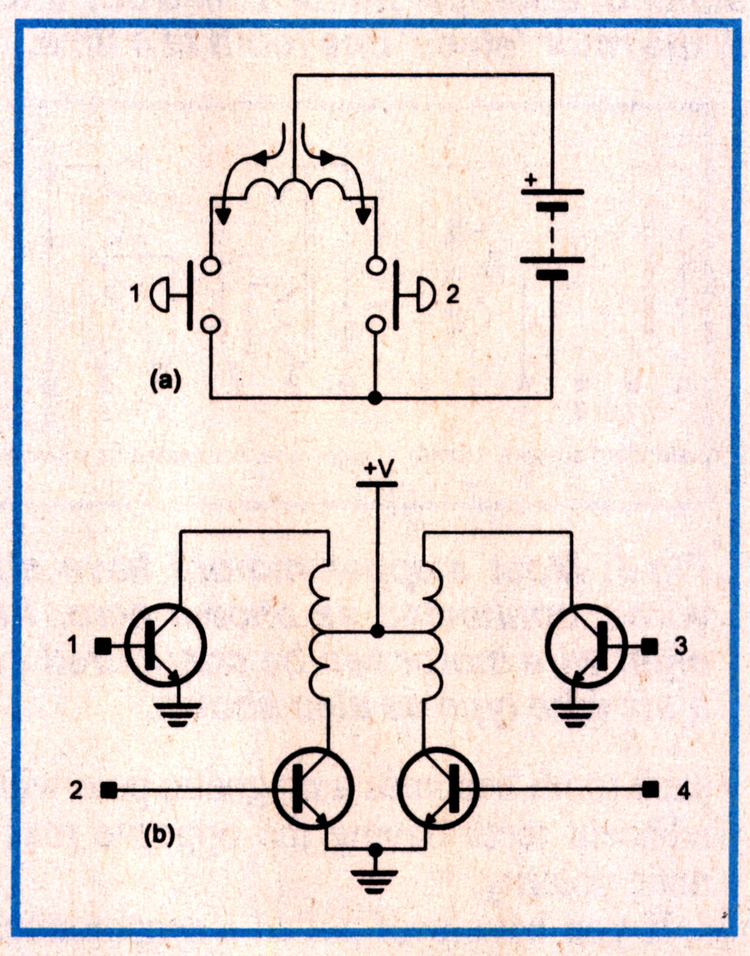

Fig.8: The equivalent switching circuit for one stepper motor coil of a four phase driver is shown in (a). Notice that the coil has a centre tap. A complete solid state driver circuit is in (b). The simplicity of the circuit is one reason for its popularity.

When pushbuttons 1A and 1B are closed, current flows from left to right in the coil. Closing 2A and 2B (with 1A and 1B opened) reverses the direction of the current flow in the coil. Again the signals driving the circuit have to be arranged so all four pushbuttons are never closed at the same time.

Incidentally, if pushbuttons 1A and 2B are closed, with 1B and 2A open, dynamic braking is applied to the motor. That is, if the motor turns, the magnetised rotor will induce a current in the coil. The current will flow in the short-circuit provided by 1A and 2B, making the motor oppose the force turning it.

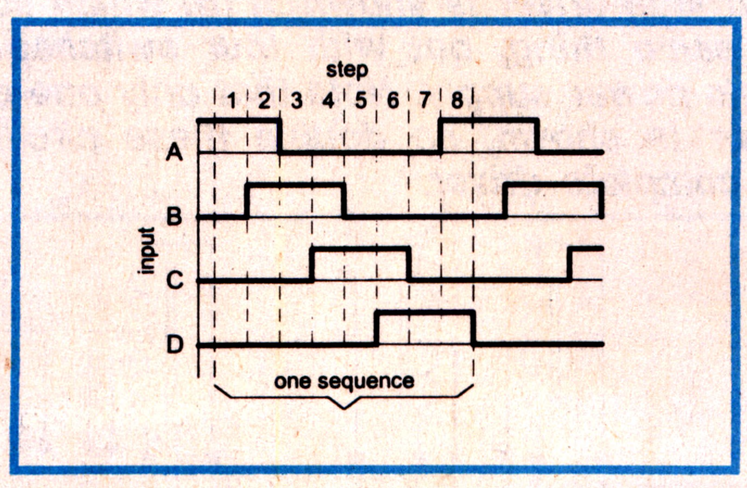

Fig.10: The sequence for half step drive is A-AB-B-BC-C-CD-D-DA, as shown by these waveforms.

6-wire driver

Now you'll see why the six-wire stepper motor is the most popular. The equivalent switching circuit for one coil is shown in Fig.8(a). Notice that only two switches and a single power supply are needed. A complete circuit for both coils therefore needs four switches. However, only half the coil is in use at any one time — so it could be argued that for a given motor size, the power output is halved.

The circuit in Fig.8(b) is the complete driver stage for a six-wire motor. It is generally called a *four-phase driver* and can be operated in one of three ways. The first, called a one-phase or wave sequence, is not used a great deal as only one winding is energised at a time — giving low torque, speed and acceleration.

However, the current consumption is also low and positional accuracy is not affected by a winding imbalance in the motor. The waveforms to pulse a one-phase driver are shown in Fig.9(a). The sequence is A-B-C-D, or D-C-B-A for reverse.

The two-phase sequence is shown in Fig.9(b). This sequence energises two adjacent phases in each detent position and has the sequence AB-BC-CD-DA. It has better torque, speed and acceleration characteristics than wave drive, and is less affected by motor resonance.

But the real advantage of a six-wire stepper is its ability to *half step*. This means the resolution of the motor is doubled, as the rotor now aligns itself, first *between* the stator poles, then at the next pulse, *in line* with the stator poles. So the motor we've been describing can now be operated in 3.75° per step mode, requiring 96 pulses per revolution.

The sequence for half step mode is A-AB-B-BC-C-CD-D-DA, and the waveforms are shown in Fig.10. This mode gives smoother running and even better freedom from motor resonance. Current consumption varies per step, but averages to about three quarters that of the two-phase sequence.

A disadvantage of the four-phase driver is that it cannot drive four-wire stepper motors. However, these are becoming the exception anyway.

That's all we have space for now. Next month, we'll describe the practical driver circuits. ❖