Techniques

ACTUALLY DOING IT!

by Robert Penfold

WHEN recently making attempts to connect my PC to the "super-highway", I was struck by the immense amount of jargon associated with this aspect of computing. It seems to be quite normal for books on the subject to be about 50 per cent glossary!

Much of this terminology is essential, as a great deal of repetition would otherwise be needed, with the same explanations and descriptions cropping up time and time again. On the other hand, it is probably fair to say that many aspects of modern technology are riddled with an excess of terminology, and a lot of genuine "gobbledygook".

Fortunately, electronics is rather less loaded down with gobbledygook than many other aspects of modern technology. As yet we do not "surf the strip-board". There is still a certain amount of necessary terminology for beginners ("newbies?" – *Robert's phrase not ours – Ed*) to deal with. This month we will consider some of the terms that tend to confound newcomers to the hobby.

FALLING OFF A LOG

Potentiometers are available in logarithmic and linear varieties. In components lists and catalogues these are normally just referred to as "log." and "lin." types respectively. There are also anti-logarithmic ("antilog.") potentiometers, but these are not widely available and are little used in practice.

What is the difference between log. and lin. potentiometers, and what happens if you use the wrong type?

A normal potentiometer is a control that is mounted on the front panel of a project. It is a form of "variable resistor" which has three tags. Two of these connect to opposite ends of a resistive track, usually made of carbon, and the third connects to a "wiper" contact that can be positioned anywhere along the resistive track by adjusting the spindle.

If a potentiometer has a value of 100k, then the resistance between the two track terminals will be approximately 100k (kilohms). If the wiper is set at a central setting, there will be about 50k between the wiper terminal and each track terminal – see Fig. 1a. If the wiper is moved so that it is about 25 per cent along the track, there will be about 25k between the wiper and one track terminal, and about 75k between the wiper and the other track terminal (Fig. 1b).

At least, this will be the case if the potentiometer is a *linear* type. If it is a *logarithmic* type the two sections of the track will have very different values with the wiper at a central setting.

The result obtained from measurements taken on a "real life" 100k logarithmic potentiometer is shown in Fig. 1c. The total track resistance is clearly more than 100k, but is within the 20 per cent tolerance rating of most potentiometers.

Of more importance is the disparate resistance in each half of the track. One half has about ten times the resistance of the other half! Results would be much the same for an anti-logarithmic potentiometer, but the two resistances would be swapped over.

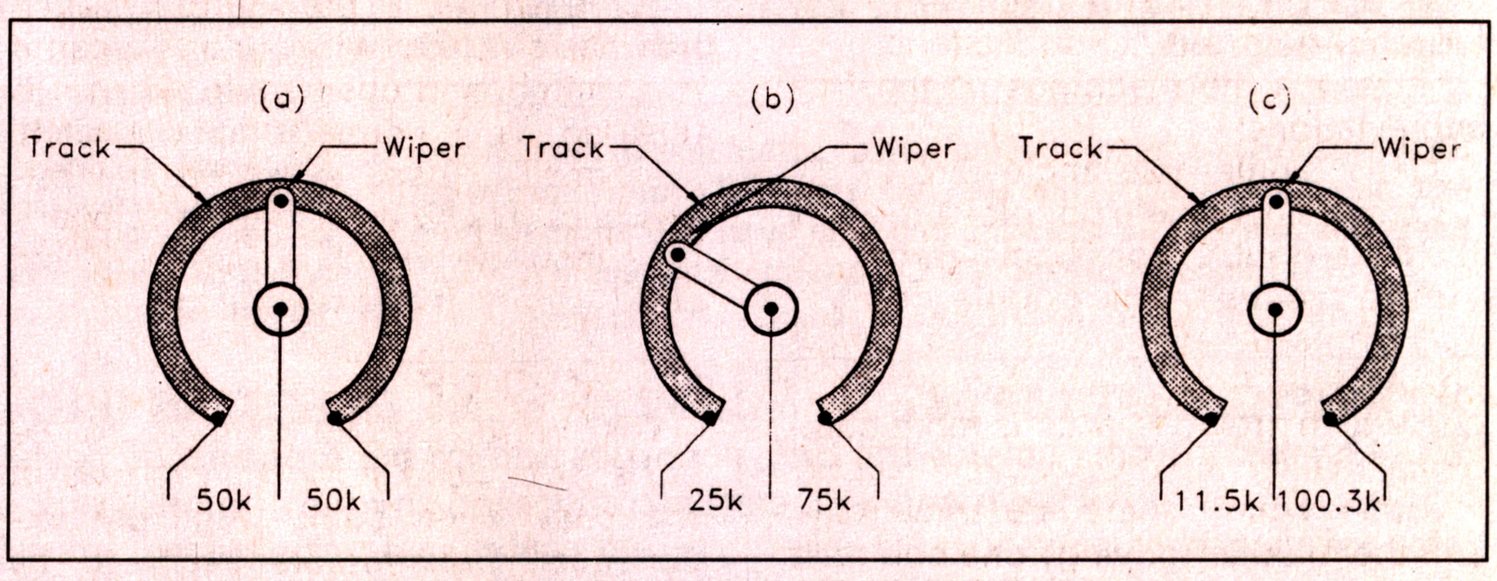

Fig. 1(a) and (b). A linear potentiometer produces the resistances one would expect; (c) a logarithmic potentiometer is very lop-sided.

SENSE OF HEARING

Linear potentiometers are used for the vast majority of applications, such as tone controls, temperature controls on electronic thermostats, and so on. Logarithmic types are designed for use as volume controls, and are used for little else. If a linear potentiometer is used as a volume control, advancing the volume from zero produces a large increase in volume initially, with large changes in the setting of the control having little effect thereafter.

This is not due to a fault in the potentiometer, but is more to do with the way the human hearing mechanism works. As sounds become louder, our hearing effectively becomes less sensitive. A logarithmic potentiometer is designed to counteract this compression effect, and give what appears to be more even variations in volume as the control is adjusted.

A project will work after a fashion if you use potentiometers of the wrong type. The control will have odd characteristics though, making it difficult to use the equipment properly. Using a potentiometer of the wrong type is satisfactory only as a temporary measure if there are supply difficulties with the right component, but is something that should otherwise be avoided.

Readers occasionally complain that components lists do not specify whether "preset" potentiometers should have logarithmic or linear laws. In most component catalogues, even the larger ones, you will not find logarithmic presets listed. Unless stated otherwise, preset resistors can safely be assumed to be linear types.

POLARISED

What is the difference between a polarised capacitor and an electrolytic capacitor? Although these are sometimes taken to be different terms for the same thing, they are not quite the same. An electrolytic capacitor is an example of a polarised capacitor, but not all polarised capacitors are electrolytics.

The only polarised non-electrolytic type in common use is the tantalum variety, which are also known as tantalum "beads", due to their bead-like shape.

Unlike ordinary capacitors, polarised types must be connected into circuit the right way round. Printed circuit mounting types are marked with "+" and "–" signs to indicate their polarity.

Printed circuit mounting capacitors are also known as just "PC" capacitors, and "radial" capacitors. These terms can be applied to practically any component that is intended for vertical mounting on a printed circuit board.

The other standard form for capacitors is the axial variety. These are tubular components having a leadout wire at each end, and intended for horizontal mounting. In other words, components that look rather like resistors, but are usually somewhat larger than normal 0·25W resistors.

The term "axial" can be applied to any component of this general form. Axial capacitors normally have "+" and (or) "–" markings, plus an identation around the body near the positive leadout wire.

IN USE

Using a non-polarised capacitor in place of a polarised type is all right from the electrical point of view, but is not likely to be very practical. Non-

polarised capacitors are generally much larger than polarised types having similar values, and are also much more expensive.

Using a polarised component in place of a non-polarised type is definitely not advisable. A polarised capacitor only functions properly if it is subjected to a d.c. signal of the correct polarity, and a suitable signal may not be present. Also, polarised capacitors tend to be much lower in quality than non-polarised types.

It is not a good idea to use an electrolytic capacitor where a tantalum type is called for. Tantalum capacitors are superior to the average electrolytic type in several respects.

They generally have closer tolerances, lower leakage currents, and work better at high frequencies. There are a few high grade and relatively expensive electrolytics which might give good results when used in place of a tantalum type, but it is advisable to err on the side of caution and use the specified type of capacitor.

ALL CHANGE

Switches are often described as something like "s.p.d.t." in components lists and component catalogues. Abbreviations such as this tend to cause a certain amount of consternation amongst beginners, but there are only four of them, and they are really quite easy to understand.

These are the meanings of the four abbreviations:

s.p.s.t. single-pole single-throw
s.p.d.t. single-pole double-throw
d.p.s.t. double-pole single-throw
d.p.d.t. double-pole double-throw

A single-throw switch is a simple on/off type. A double-throw switch is one which provides what is more commonly called a "changeover" action. In other words, there are three tags, and the middle (moving) one connects through to one or other of the other two tags, depending on the setting of the switch.

A single-pole switch has just one set of contacts. a double-pole type has two sets, and is effectively two switches operated in unison.

The circuit symbols for the four types of switch, and how these relate to practical switches, is shown in Fig. 2. The tag arrangements shown are the most common ones, but they are not truly universal. With any switch it is not a bad idea to check what connects to where using a continuity tester (i.e. multimeter set to Ohms range), rather than jumping to conclusions.

In component catalogues you may find that some types of switch are only available as s.p.s.t. and d.p.d.t. types. This rationalisation is possible because a d.p.d.t. switch can be used as a d.p.s.t. or s.p.d.t. type.

Simply ignore tags "d", "e", and "f", and the other three contacts provide a s.p.d.t. switch. Ignore tags "c" and "f," and the other four provide a d.p.s.t. action.

Although toggle switches are well known to those who build electronic projects, few newcomers to the hobby seem to have heard of "toggle" switches before. They are just switches that are operated via small levers. Believe it or not, the lever of a toggle switch is called a "dolly".

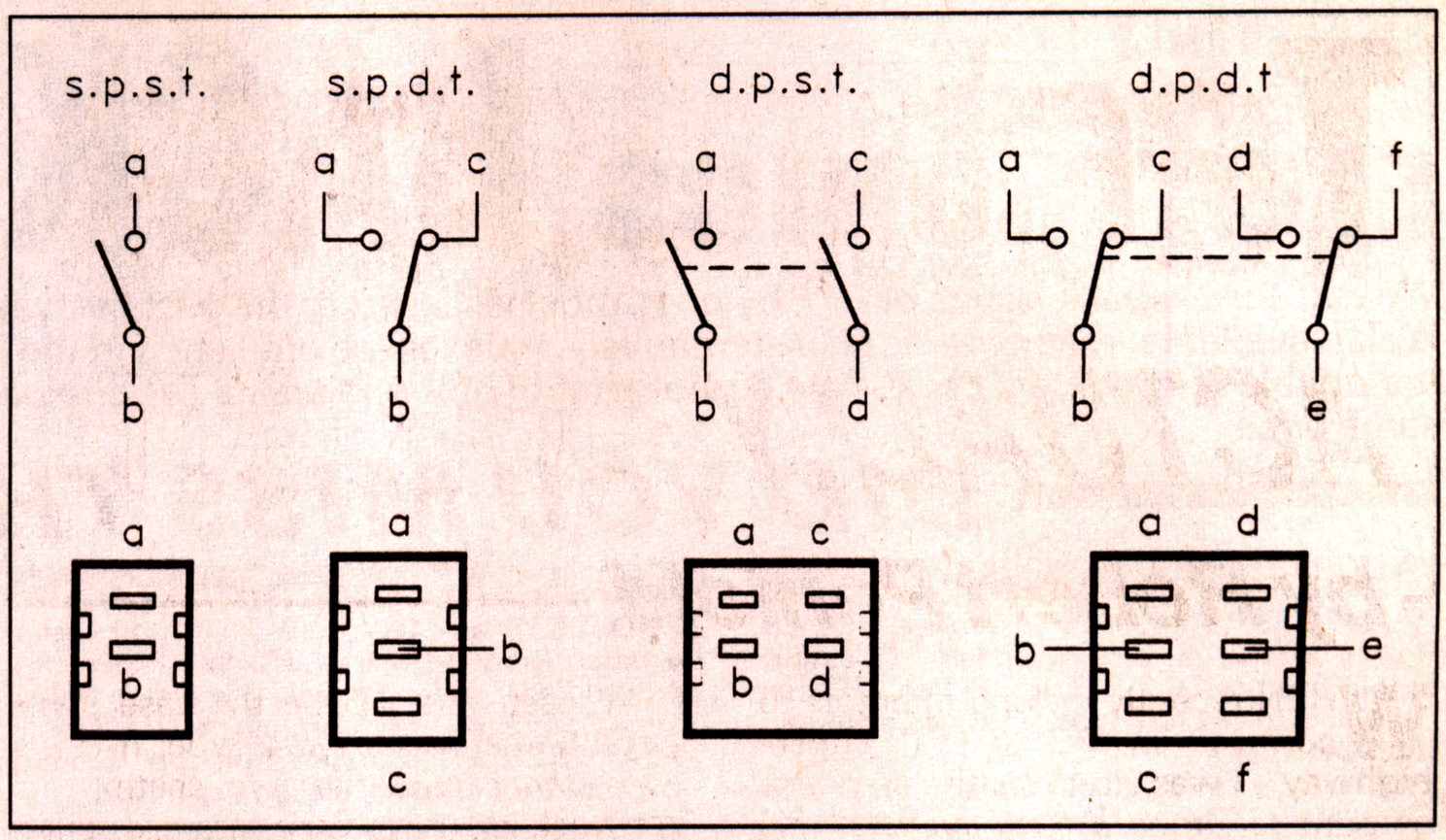

Fig. 2. Circuit symbols and most common tag arrangements for the four basic types of switch.

With relay contacts and switches you may sometimes encounter the abbreviations "n.c." and "n.o.", which stand for "normally closed" and "normally open". These terms are used to describe single-throw switches that are *biased* to *one* position.

For example, a pushbutton switch that has contacts which close when it is operated, and open again when it is released, is a normally open switch. A normally closed switch is the opposite of this, with the contacts opening when the switch is operated, and closing when it is released.

CHOKED UP

The word "choke" seems to be rather less used now than it was in the past. Even some relatively experienced constructors seem to be puzzled by references to this type of component.

It is merely an alternative name for an inductor, and it is mainly used when referring to small inductors for use in radio frequency equipment (r.f. chokes). It is occasionally applied to larger inductors, such as those used in mains interference suppressors.

D.I.L. stands for "dual-in-line", and it is a term normally applied to integrated circuits. These mostly have two rows of pins spaced 0·3 inches apart, or 0·6 inches in the case of large devices having more than about 22 pins. Pin spacing is 0·1 inches. The term "d.i.l." can be applied to any component that has two lines of pins, such as banks of miniature printed circuit mounting switches, and integrated circuit holders.

There are also s.i.l. (single-in-line) components which have a single row of pins, but these are relatively rare. The only common examples are banks of resistors, and integrated circuits that are designed to handle high powers. At one time there were also q.i.l. (quad-in-line) integrated circuits, but this type of encapsulation now seems to be obsolete.

When ordering integrated circuits you do not normally need to specify a d.i.l. or (where appropriate) s.i.l. encapsulation. Most integrated circuits are available from manufacturers in a variety of case styles, including various surface mount types. In general, component retailers only offer the plastic s.i.l. or d.i.l. version of a device.

If two versions are available, the article concerned should clearly state which version is required. In most cases the type numbers will be slightly different anyway, with the suffix usually indicating the case style ("CP" for a plastic d.i.l. encapsulation for example).

ACTUALLY **DESIGNING** IT!

Starting in *EPE* November issue:
An enticing new series explaining in simple steps how a multitude of circuits can be designed from very simple building blocks.

Don't miss *"TEACH-IN* **'96"**
Subscribe **NOW!**