Name: Motion Filter / Follower	Manufacturer / Designer: PAiA Electronics	Revision: 10/29/95	Model # 5720

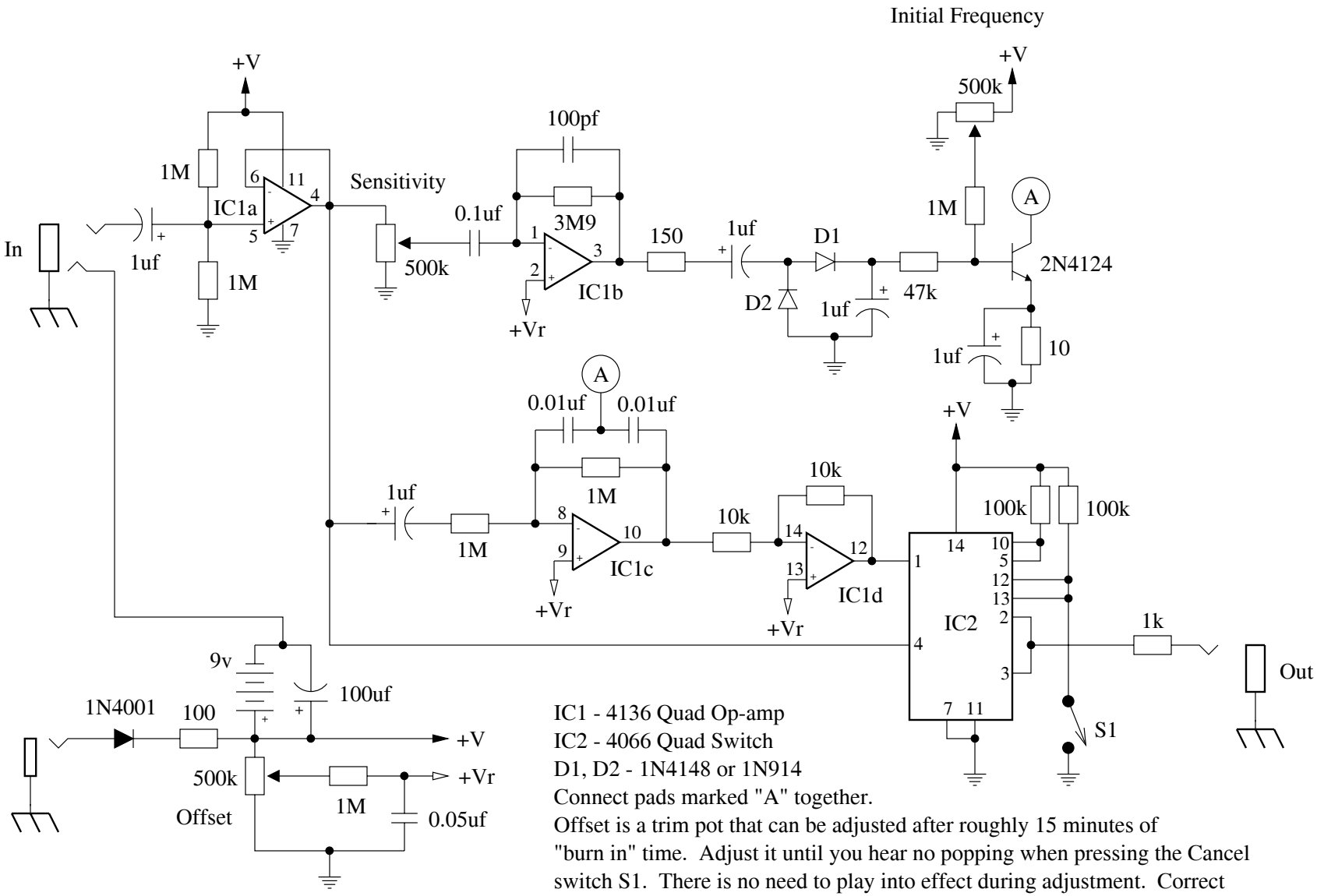

IC1 - 4136 Quad Op-amp
IC2 - 4066 Quad Switch
D1, D2 - 1N4148 or 1N914
Connect pads marked "A" together.
Offset is a trim pot that can be adjusted after roughly 15 minutes of "burn in" time. Adjust it until you hear no popping when pressing the Cancel switch S1. There is no need to play into effect during adjustment. Correct setting should be near the middle of the rotation.