SCHEMATIC DIAGRAM-1

OPTICAL PICKUP UNIT

: +B SIGNAL LINE

: CD-DA SIGNAL LINE

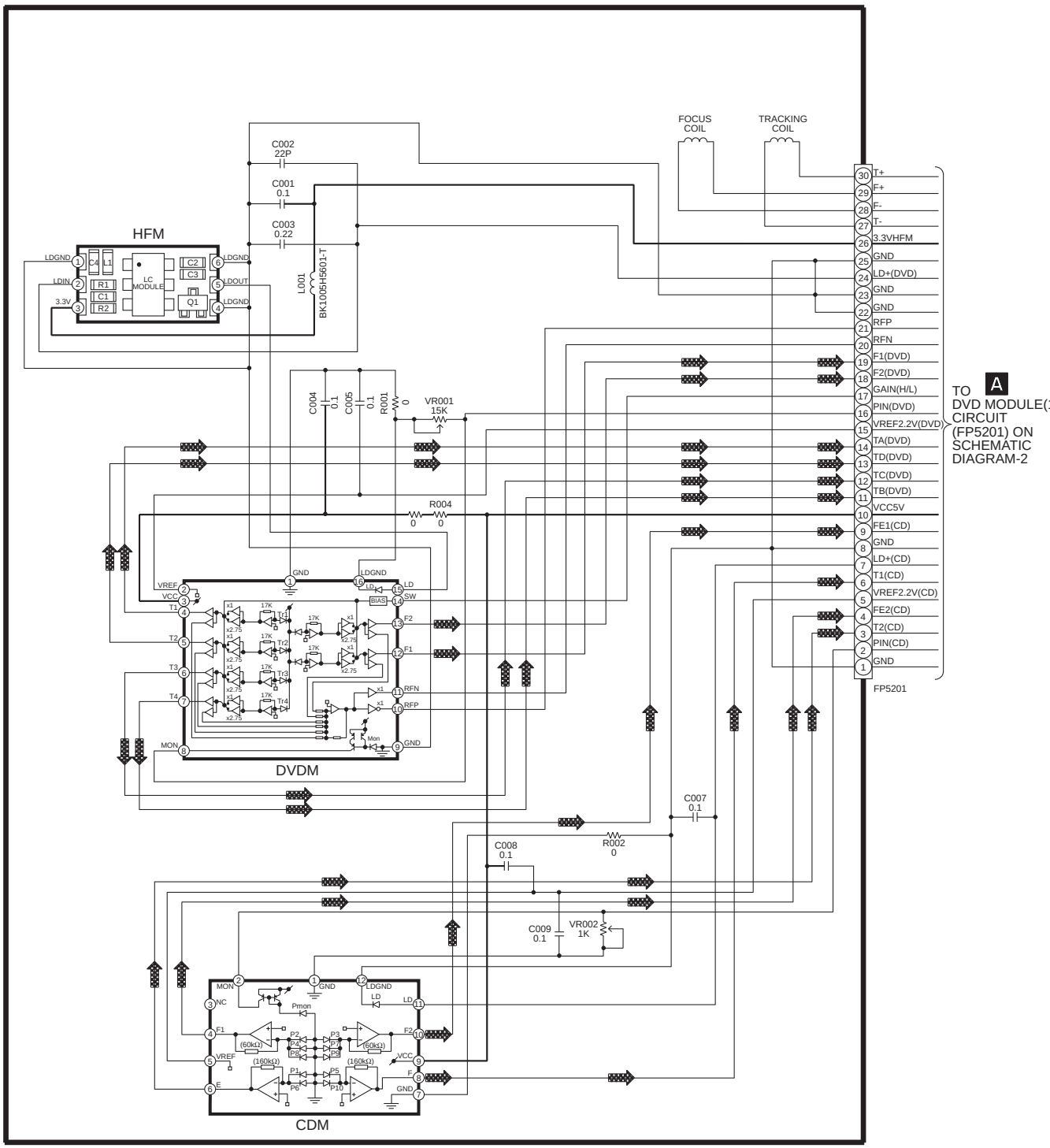

SCHEMATIC DIAGRAM-2

A DVD MODULE(1) CIRCUIT

: +B SIGNAL LINE
: CD-DA SIGNAL LINE

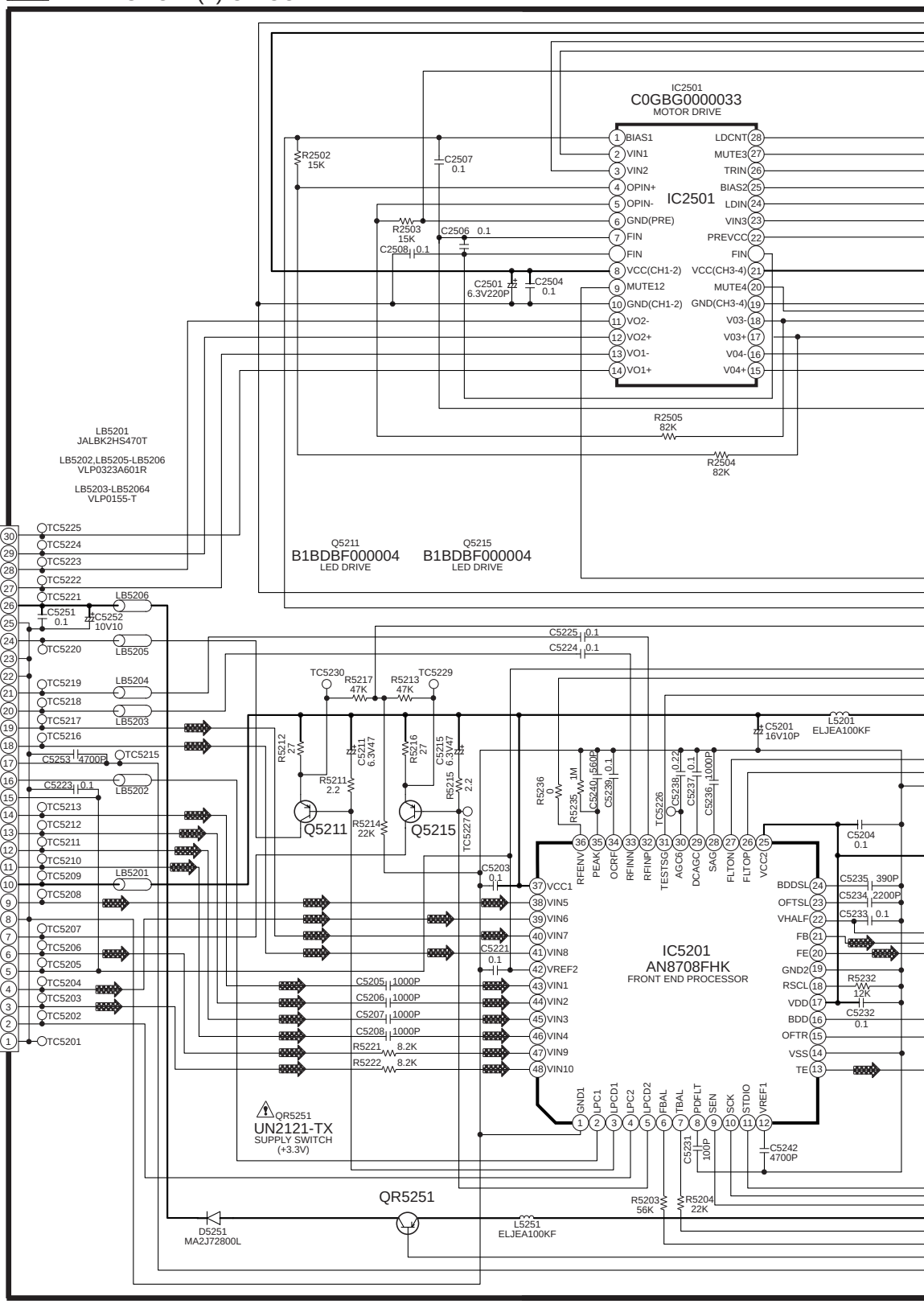

SCHEMATIC DIAGRAM-3

A DVD MODULE(1) CIRCUIT
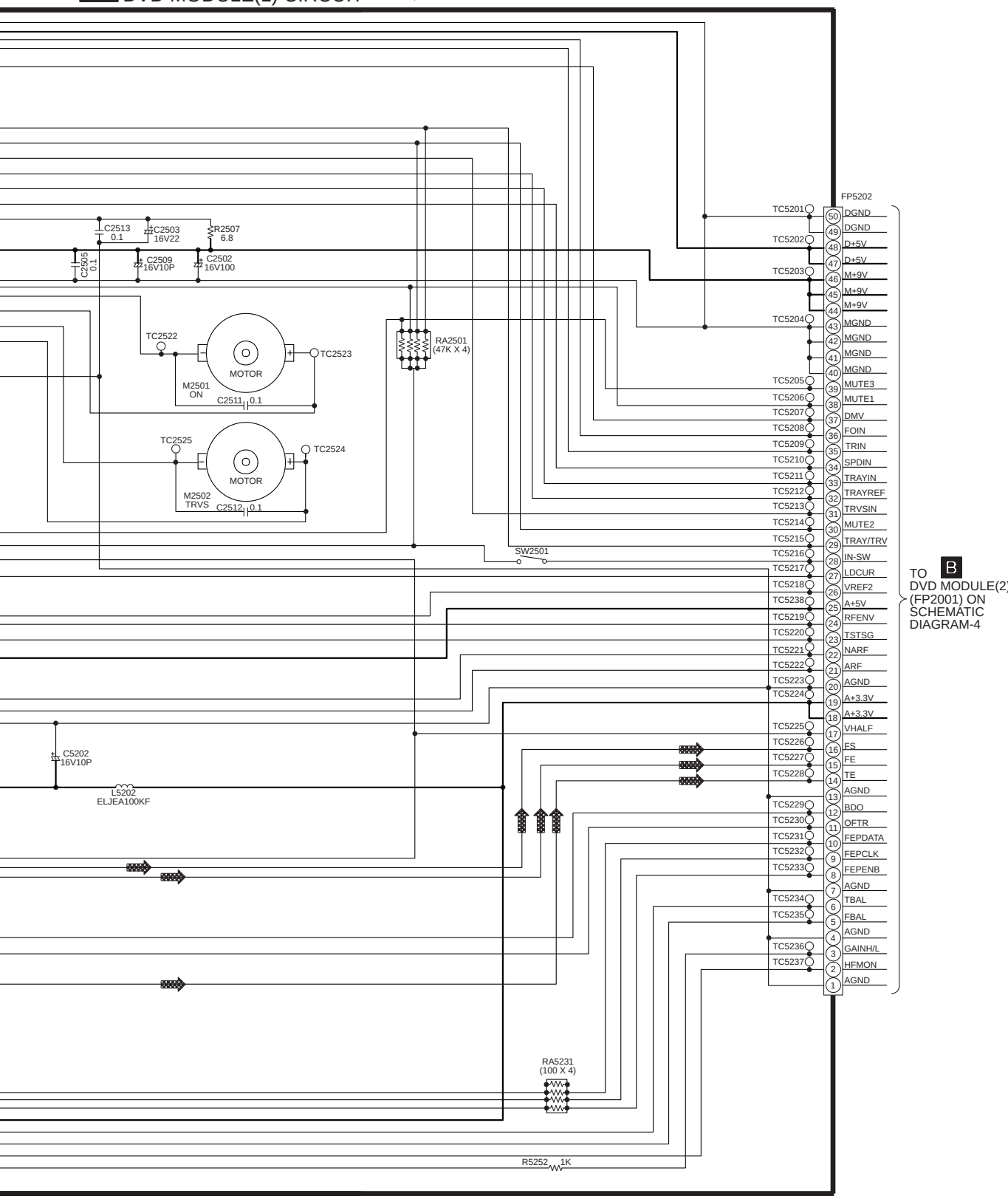
: +B SIGNAL LINE
: CD-DA SIGNAL LINE