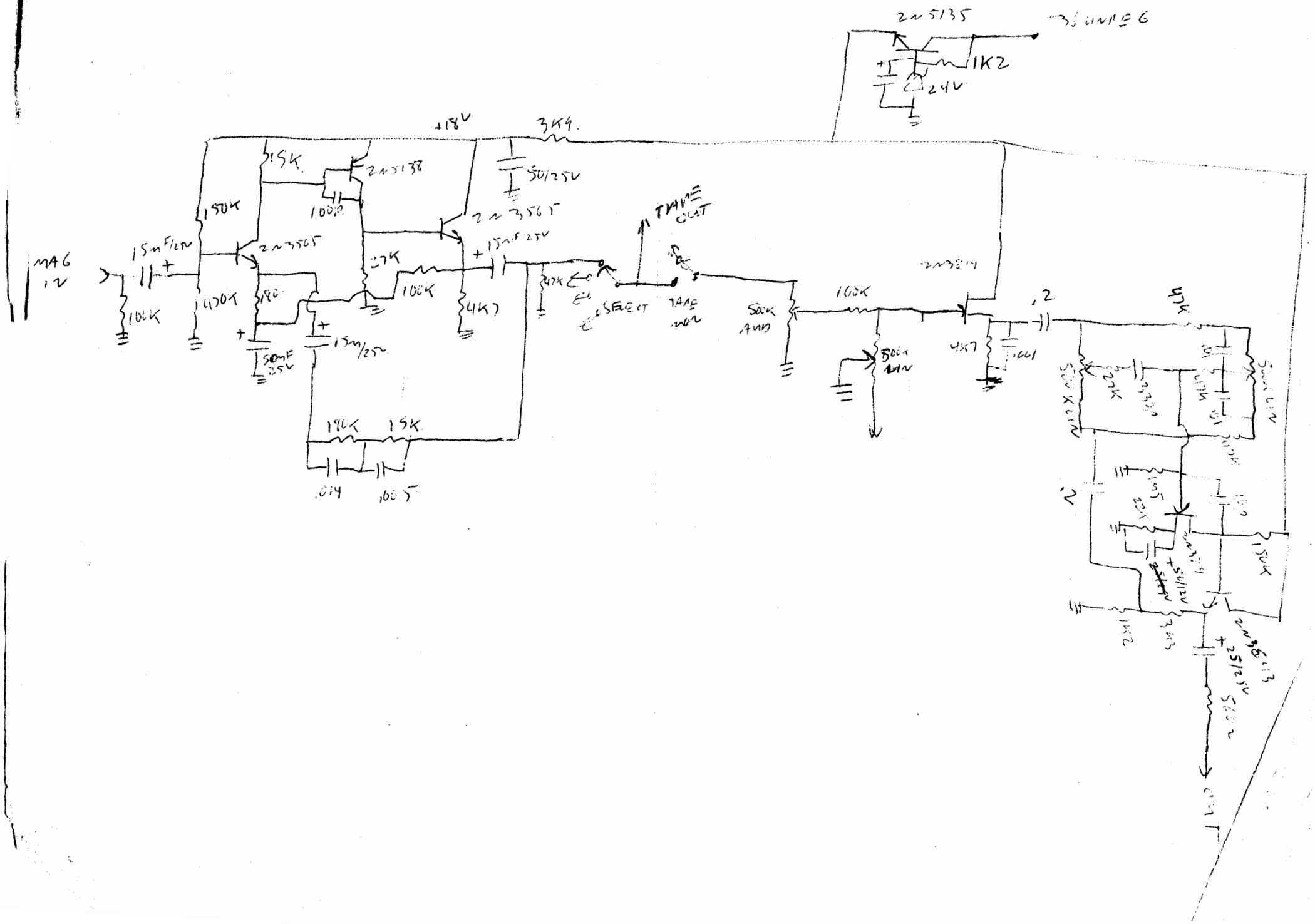
2N5135
1K2
24V
+18V
3K9
50/25V
15K
2N5138
100Ω
2N3565
2N3565
150K
15mF/25V
MAG
12
100K
470K
180
50mF
25V
15m/25V
27K
100K
4K7
15mF 25V
47K
SELECT
TAPE
OUT
TAPE
OUT
50K
AMP
100K
2N3614
4K7
.1
47K
50K
LIN
27K
3300
470K
470K
1M5
27K
150K
2N3614
50/12V
1K2
3K3
2N3613
25/25V
560Ω
.014
.005