APPLICATION CIRCUITS
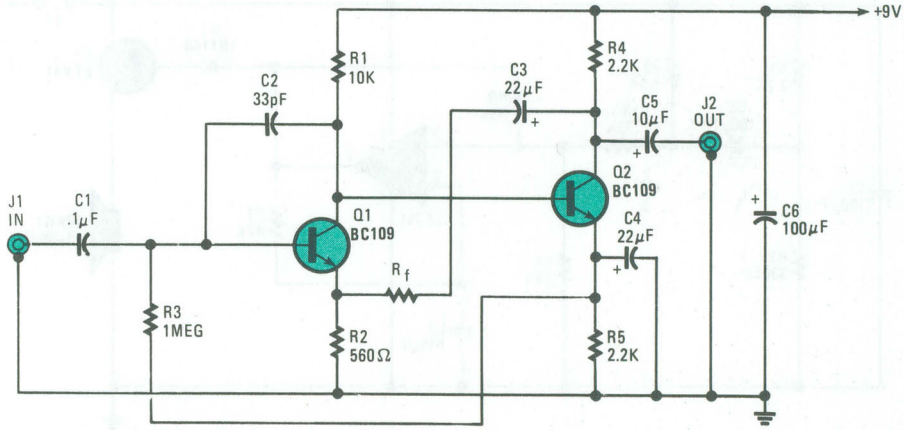
GENERAL–PURPOSE PREAMPLIFIER