MA-5 82-3

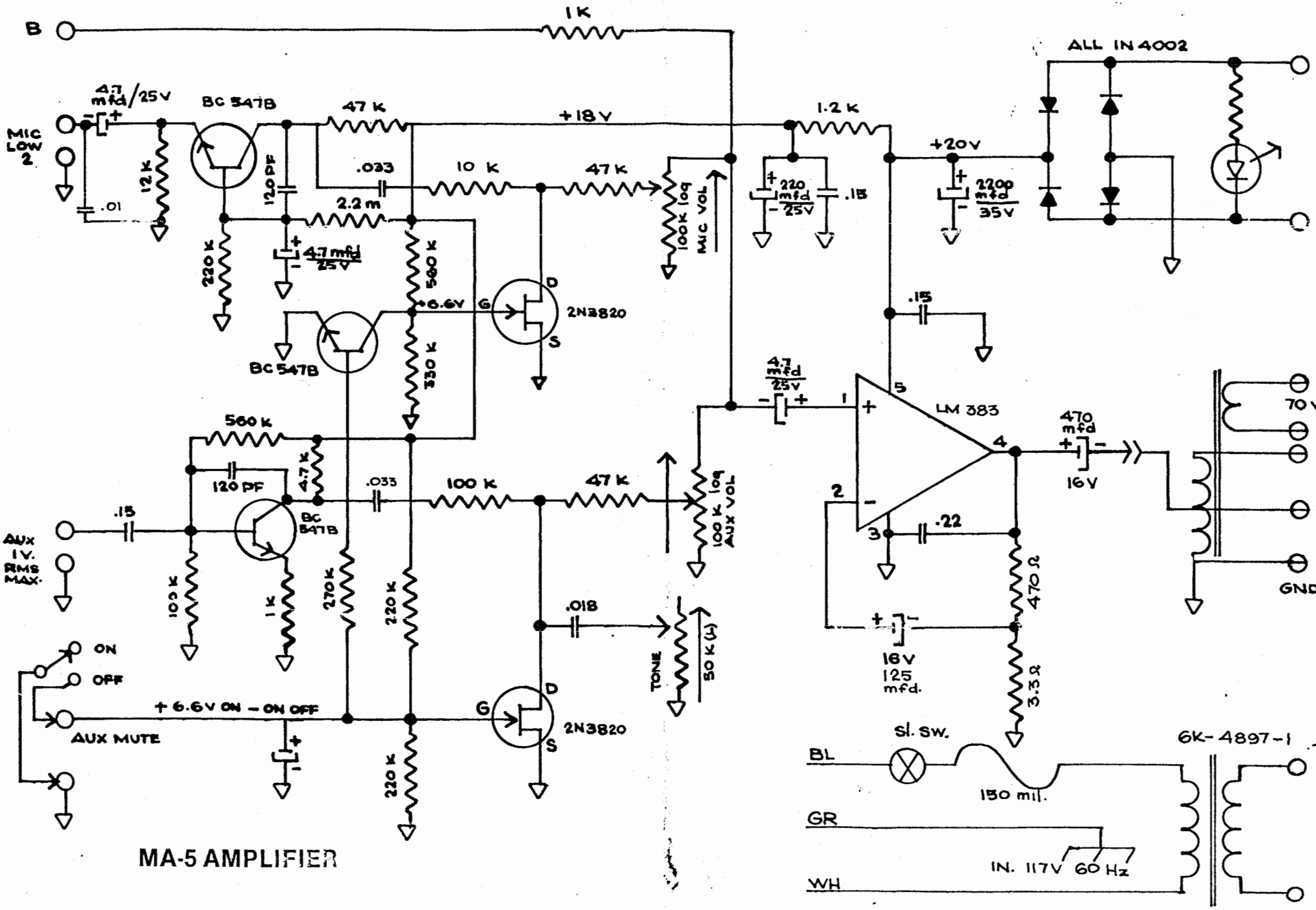

MA-5 AMPLIFIER