maximum cooling at a heat-sink impedance of zero, the situation changes radically with increasing impedance until there's no net cooling whatsoever. Further, for impedance greater than one, instead of cooling, the maximum TEC drive actually heats rather than cools. **Figure 2** shows the simple solution for this problem: You must replace the data sheet's maximum current and voltage values with new, lower maximum-drive values corresponding to the optimal numbers you need to achieve maximum cooling whenever impedance is greater than zero. EDN

Interface MIDI instruments to a PC through a USB port

Stefano Palazzolo, Senago, Milan, Italy

This Design Idea uses the FT-232BM from Future Technology Devices International (www.ftdichip.com), a USB-to-UART interface IC that you need not program, to interface a USB port to the MIDI (musical-instrument-digital-interface) bus (**Figure 1**). The USB signals directly interface to IC_1, an FT232BM. The serial-transmitter and -receiver signals pass through IC_2 and IC_3 to transform the RS-232 signals to the MIDI's loop current. You can use an EEPROM, IC_4, if you want to add a serial-number interface or use more than one interface.

This hardware doesn't require you to write any software. However, you must install two drivers. First, you need the free VCP driver from FTDI at www.ftdichip.com/Drivers/VCP.htm. It allows you to use this interface as a common serial-port interface. Before you install it, you must change a string in the file FTDIPORT.INF (**Reference 1**) to set up the 31,250-baud rate for FT232BM. Then, you can configure VCP to run at 38,400 baud. (The real baud rate will be 31,250 as preset in FTDIPORT.INI.)

Then, you must install another driver that permits you to see your VCP serial port as a MIDI port for addressing all MIDI messages. You can find a lot of similar drivers on the Internet. For example, the Roland serial MIDI driver is available at: http://www.roland.it/dow_drivers/for_win/serial32_wxp2k.exe. You can enable this driver on the COM1 or the COM3 port.

Listing 1, at www.edn.com/080417di1, shows the changes to add to the FTDIPORT.INF file that change the baud rate from 38,400 to 31,250 baud. Change this file before installation. EDN

REFERENCE

1 "FT232BM Designers Guide, Version 2," FTDI, 2002/2003, www.ftdichip.com/Documents/AppNotes/DF232_20.pdf.

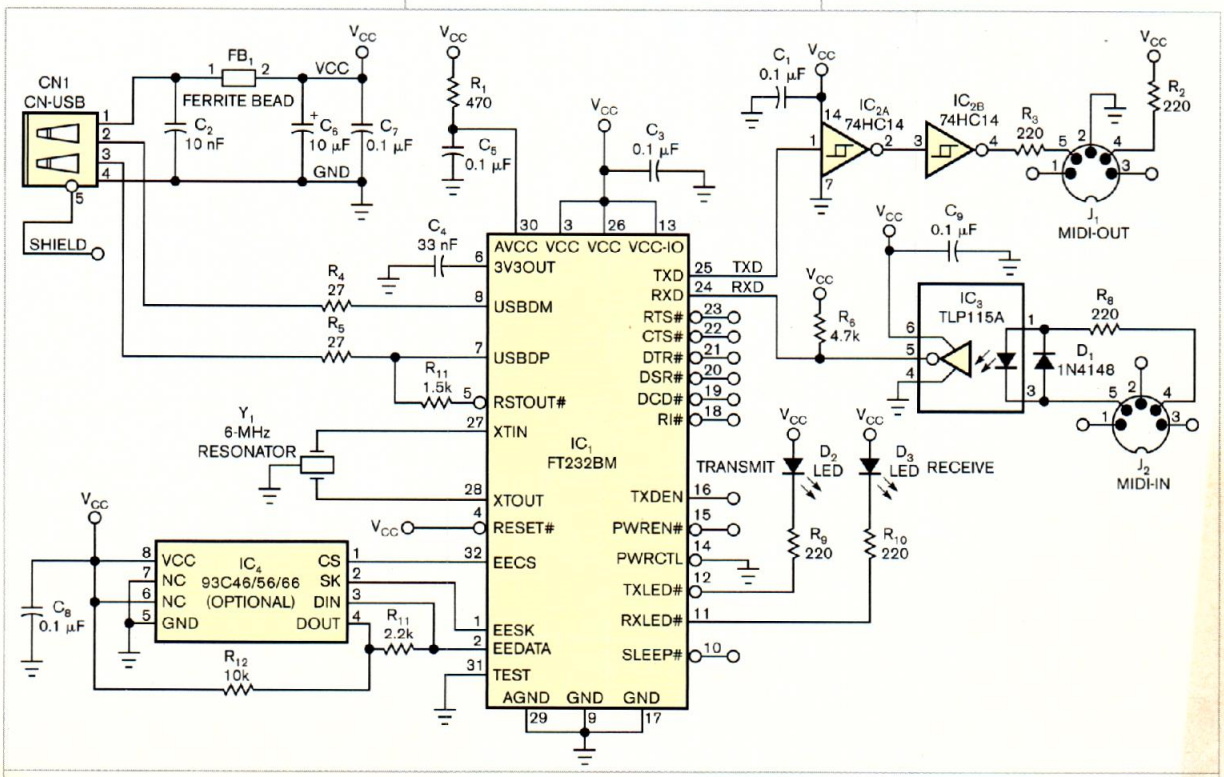

Figure 1 This USB-to-MIDI interface uses the FT232BM, a USB-to-UART interface chip that you need not program.