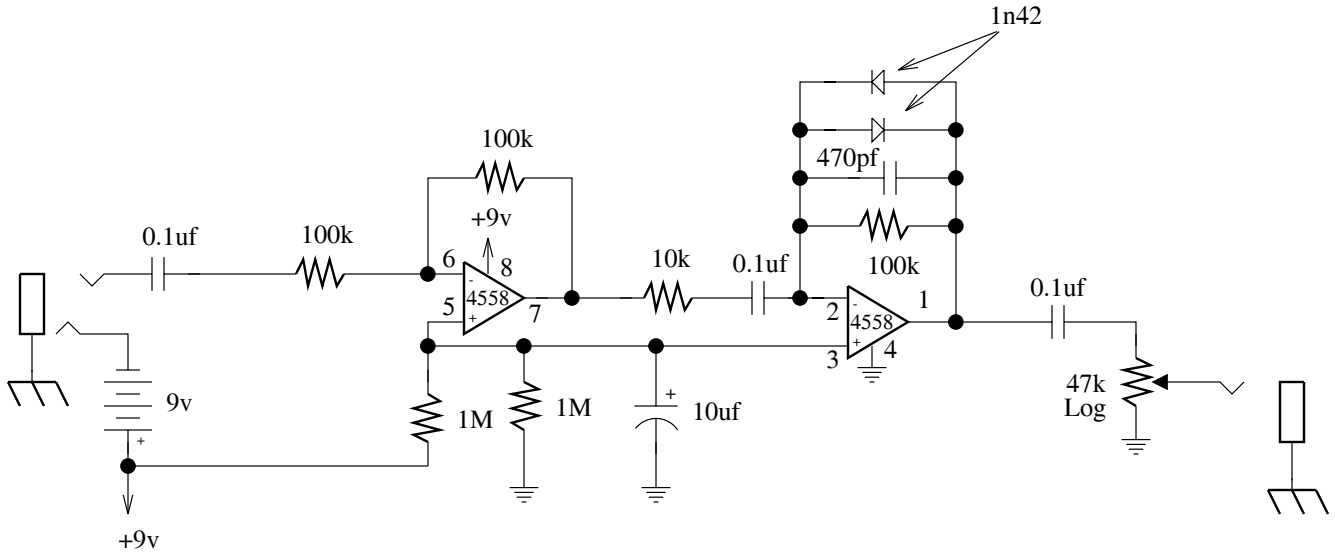Fuzz 001 - Unknown Commerical Source