Peak detection with the THAT4301

The following schematic shows the level detector of a THAT4301 configured as a peak detector. The detector, which normally responds in true rms fashion, is re-configured for peak operation by making C1, the timing capacitor, quite small, thereby disabling the logarithmic filtering. The threshold amplifier, OA1, also acts as a precision rectifier, with the peak value being stored on C2. The decay rate is determined by C2 and the parallel combination of R7 and R4 in series with VR3. VR3 is used to set the compression ratio. The threshold is set with VR2, and R3's function is to skew the adjustment range of VR3. VR5 sets the circuit gain.

One may eventually want to replace the potentiometers with fixed resistors when circuit requirements are determined in more detail.

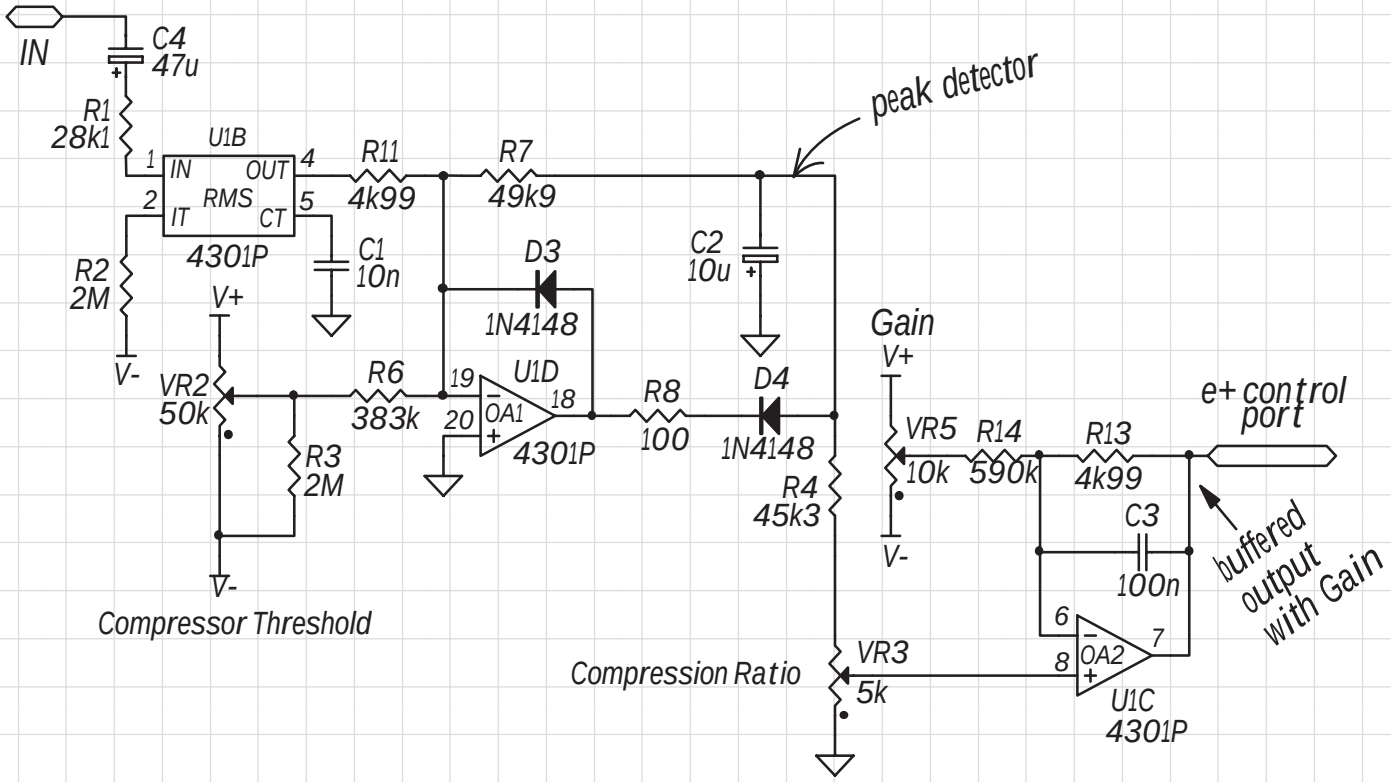

THAT4301 detector

Copyright © 2000
by THAT Corporation.
All rights reserved.

THAT Corporation
45 Sumner Street, Milford, MA 01757-1656 USA
tel: +1 508 478 9200 fax: +1 508 478 0990 web: www.thatcorp.com